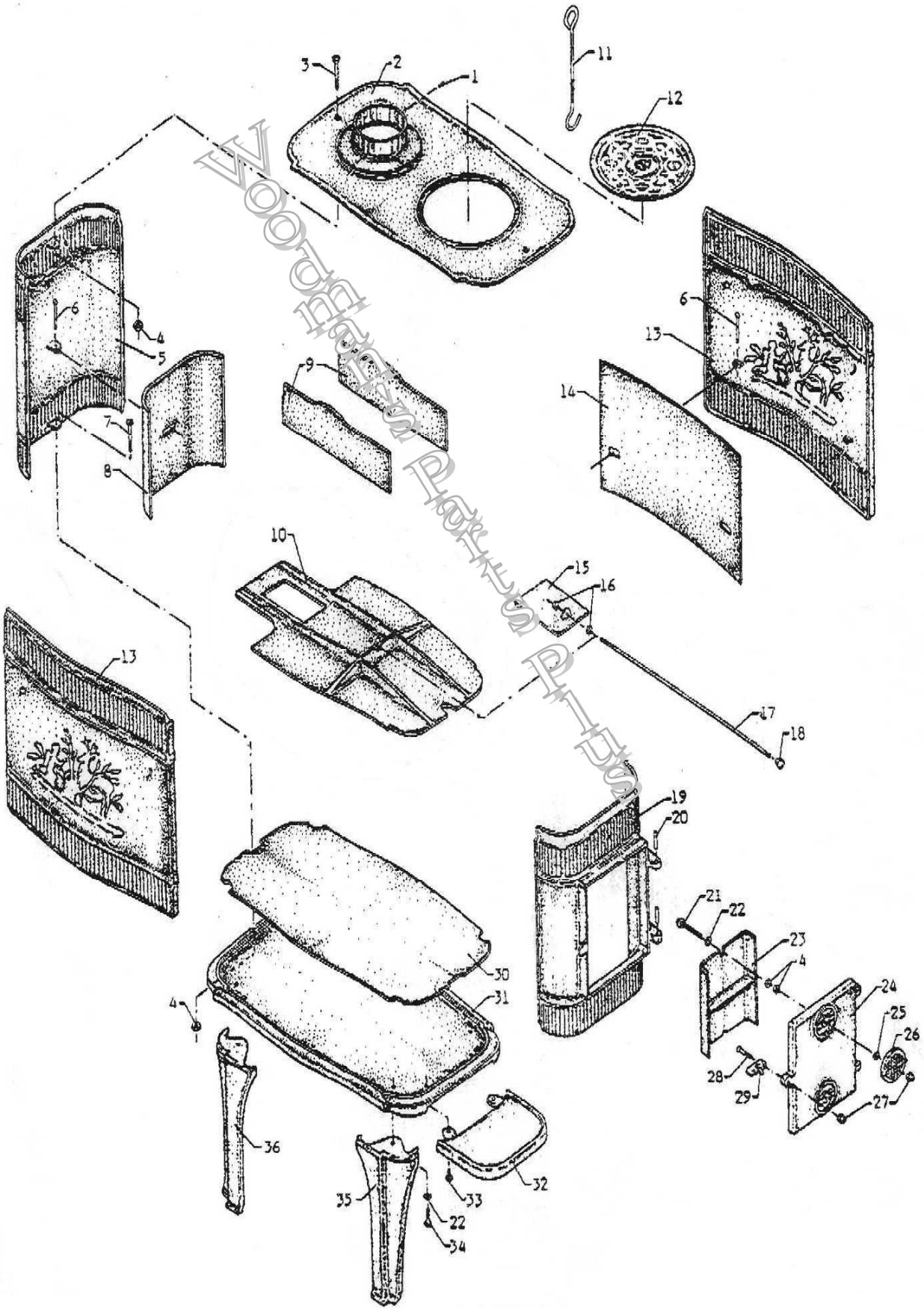

Woodmansee Parts Plus