Regency
FIREPLACE PRODUCTS

INSTALLATION AND OPERATING INSTRUCTIONS
FOR THE ULTIMATE
DIRECT VENT FREESTANDING GAS STOVE

MODEL: U45-NG / U46-NG NATURAL GAS
U45-NG / U46-LP PROPANE

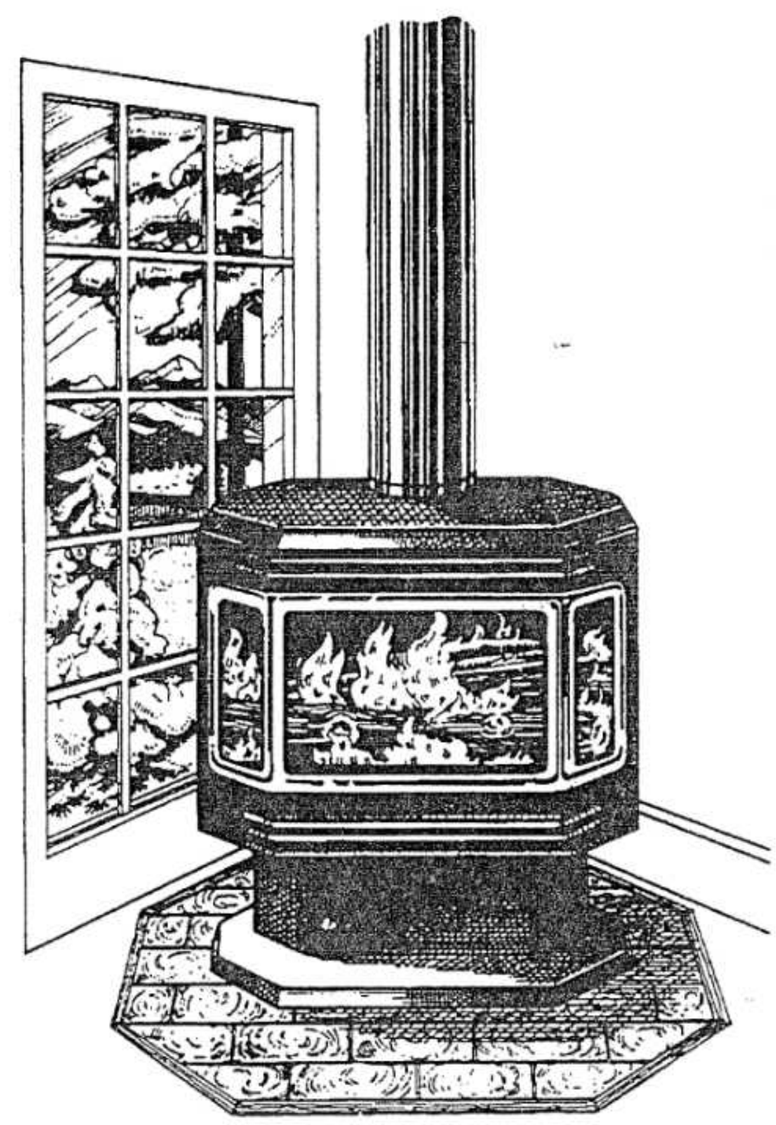

LISTINGS AND CODE APPROVALS

These gas appliances have been tested in accordance with National Safety Standards, and have been certified by Warnock Hersey for installation and operation as described in these Installation and Operating Instructions in the United States and Canada.

Check with your local building code agency before you begin your installation to ensure compliance with local codes, including the need for "permits" and follow-up inspections. If any problems are encountered regarding code approvals, or if you wish clarification of any of the instructions contained here, contact your local dealer.

Your unit should be serviced annually by a qualified service person.

PLEASE KEEP THESE INSTRUCTIONS FOR FUTURE REFERENCE

WARNING:
Improper installation, adjustment, alteration, service or maintenance can cause injury or property damage. Refer to this manual. For assistance or additional information consult a qualified installer, service agency or the gas supplier.

FOR YOUR SAFETY
Do not store or use gasoline or other flammable vapours and liquids in the vicinity of this or any other appliance.

FOR YOUR SAFETY

WHAT TO DO IF YOU SMELL GAS:
1) Open windows.
2) Turn off main gas supply
3) Do not touch any electrical switch.
4) Extinguish any open flames.
5) Immediately call your gas supplier or fire department from a neighbour's phone.

Regency Industries Ltd.
7830 Vantage Way, Delta, B.C.
Canada, V4G 1A7

Tested by Warnock Hersey:

WARNOCK HERSEY

REGENCY
ULTIMATE DIRECT VENT FREESTANDING GAS STOVE

TO THE NEW OWNER:

Congratulations! You are the owner of a state-of-the-art ULTIMATE Direct Vent Gas Stove by Regency Industries Ltd. The Regency Gas Series of hand crafted appliances has been designed to provide you with all the warmth and charm of a woodstove, at the flick of a switch. The models U45-NG/U46-NG and U45-LP/U46-LP of this series has been approved by Warnock Hersey for both safety and efficiency. As it also bears our own mark, it promises to provide you with economy, comfort and security for many trouble free years to follow. Please take a moment now to acquaint yourself with these instructions and the many features of your ULTIMATE Direct Vent Freestanding Gas Stove.

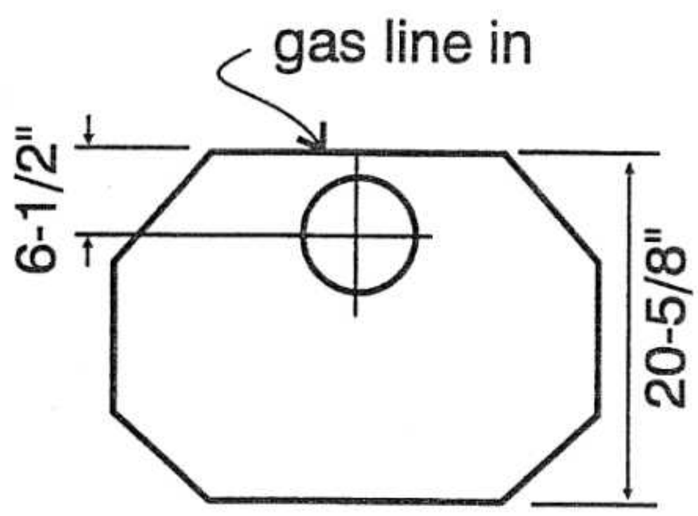

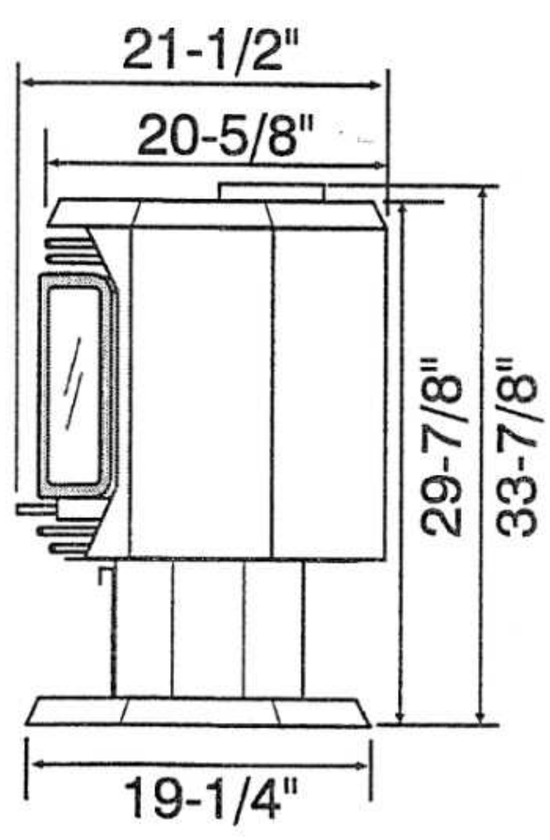

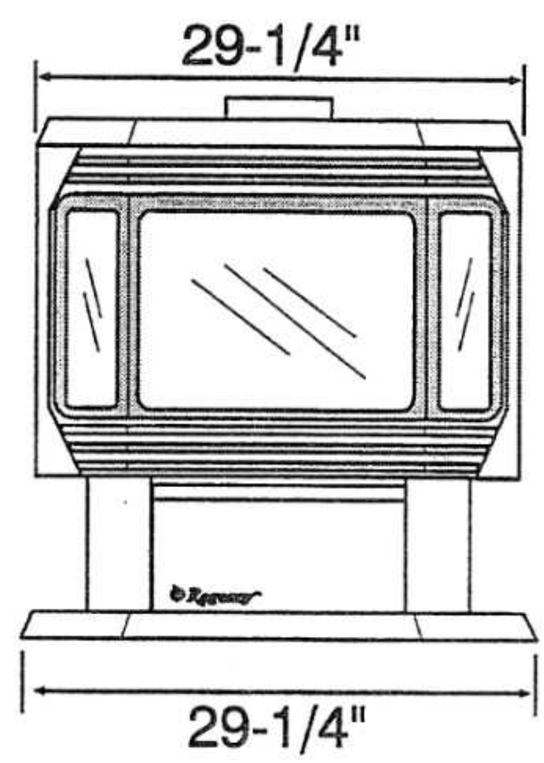

TABLE OF CONTENTS

	PAGE
SAFETY LABEL	
Safety Label	4
PARTS LIST	
Parts List	5
INSTALLATION	
Gas Pipe Testing	6
Specifications	6
Before you start	6
General Safety Information	7
Locating your ULTIMATE Gas Stove	7
Clearances to Combustibles	8
Combustion and Ventilation Air	8
Venting	8
Installation Precautions	8
Exterior Vent Terminal Locations	9
Venting Arrangements	
- Horizontal Terminations	10
- Residential Installation	10
Manufactured Homes/Mobile Home	
Venting Arrangements - Vertical Terminations	
- Straight vertical	11
- Offset vertical	11
Safety Precautions for the Installer	12
Planning Your Installation	12
Parts List	12
Vent Restrictors #1 and #2	14
Horizontal Installations	14
Vertical Termination	16
Cathedral Ceiling Installations	18
Gas Connection	19
High Elevation	19
Log Installation	20
Door Installation and Door Latch	21
Aeration Adjustment	21
Gas Pressure Test	22
Optional Wall Thermostat	22
Optional Remote Control Installation	22
Final Check	23
Wiring Diagram	23
OPERATING INSTRUCTIONS	
Operating Instructions	24
Lighting Procedure	24
Shutdown Procedure	24
Copy of Lighting Plate Instructions	25
First Fire	26
Convection Fan Operation	26
MAINTENANCE	
Maintenance Instructions	26
General Vent Maintenance	27
Log Replacement	28
Gold Plated Doors	28
Door Gasket	28
Latch Adjustment	28
Glass Replacement	28
Glass Door Replacement	28
Fan Maintenance	29
Replacing fan	30
Removing valve	30
WARRANTY	
Warranty	35

SAFETY LABEL

This is a copy of the label that accompanies each ULTIMATE Direct Vent Freestanding Gas Stove. We have printed a copy of the contents here for your review. The safety label is located on the inside of the drop down pedestal door.

NOTE: Regency units are constantly being improved. Check the label on the unit and if there is a difference, the label on the unit is the correct one.

DO NOT REMOVE THIS LABEL

Serial No. / No de serie: WH - U

NE PAS ENLEVER CETTE ÉTIQUETTE

WARNOCK HERSEY

Listed: GRAVITY DIRECT VENT WALL FURNACE
Tested to: CAN1-2.19-M81, CGA IR No 41, CGA IR No 55, ANSI Z21.44a-1992
Certified for/Certifiée pour: CANADA AND U.S.A.
REPORT NO. 476-1089 (FEB. 1995)

Regency FIREPLACE PRODUCTS

PROPANE GAS STOVE: Model U45-LP/U46-LP

Minimum supply pressure	LPG	10.5" WC /C.E.
Manifold pressure	LPG	10.0" WC /C.E.
Orifice size - Rear	LPG	55 DMS
Orifice size - Front	LPG	57 DMS
For use with propane gas.		
Output - Fan ON		24,915 BTU
Output - Fan OFF		24,090 BTU
Maximum Input Altitude	0-2000 ft/pi (0-610 m)	33,000 BTUH

Model/Modele: U45-LP/U46-LP

APPAREIL FONCTIONNANT AU PROPANE CONCU POUR ETRE POELE: Modele U45-LP/U46-LP

Pression d'alimentation minimum	
Pression a la tubulure d'alimentation	
Grandeur de l'injecteur	
Grandeur de l'injecteur	
Pour usage avec propane	
Débit Calliforique - Ventilateur en Marche	BTU
Débit Calliforique - Ventilateur Éteint	BTU
Débit calorifique maximum selon l'altitude	

NATURAL GAS STOVE: Model U45-NG/U46-NG

Minimum supply pressure	NAT	5.0" WC /C.E.
Manifold pressure	NAT	3.5" WC /C.E.
Orifice size - Rear	NAT	42 DMS
Orifice size - Front	NAT	49 DMS
For use with natural gas.		
Output - Fan ON		29,640 BTU
Output - Fan OFF		28,120 BTU
Maximum Input Altitude	0-2000 ft/pi (0-610 m)	38,000 BTUH

Model/Modele: U45-NG/U46-NG

APPAREIL FONCTIONNANT AU GAZ NATUREL CONCU POUR ETRE POELE: Modèle U45-NG/U46-NG

Pression d'alimentation minimum	
Pression à la tubulure d'alimentation	
Grandeur de l'injecteur - arriere	
Grandeur de l'injecteur - devant	
Pour usage avec gaz naturel.	
Débit Calliforique - Ventilateur en Marche	BTU
Débit Calliforique - Ventilateur Éteint	BTU
Débit calorifique maximum selon l'altitude	

VENTING: Use listed Simpson Dura-Vent Direct Vent GS System. Only for direct discharge without duct connection. This appliance must be installed in accordance with local codes, if any; if not, follow ANSI Z223.1 / CAN 1-B149. Manufactured Home Installation-USA ONLY: This appliance may be installed in Manufactured Homes in accordance with the manufacturer's instructions and the Manufactured Home Construction and Safety Standards, Title 24 CFR, Part 3280.

Electrical Supply 115 V, 1.13 A, 60 Hz
Not for use with solid fuel.

Ventilation: Utiliser le système indiqué GS de ventilation directe Dura-Vent de Simpson.
Pour décharge directe seulement sans raccord de conduit. Cet appareil doit être installé conformement aux exigences des codes locaux, s'il n'existe aucun code local, se conformer à la norme ANSI Z223.1 / CAN 1-B149 en vigueur.

Alimentation électrique
Ne doit pas être utilisé avec un combustible solide.

Regency Industries Ltd., Delta, B.C., Canada

MADE IN CANADA / FABRIQUE AU CANADA

908-374 WD

DOOR SEAL ADJUSTMENT: Please check that door is properly sealed. Periodic adjustment of latch may be required.

Minimum Clearances to Combustibles
Degagement Minimum Des Materiaux Combustibles:

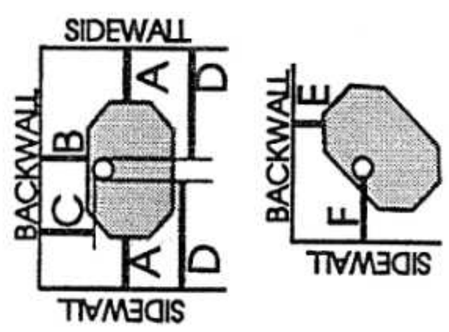

A	7-1/2"	/ 190 mm
B	4"	/ 100 mm
C	7-1/2"	/ 190 mm
D	18-1/2"	/ 470 mm
E	2"	/ 50 mm
F	8-1/2"	/ 215 mm

Min. Ceiling Height from top of unit / Min. Plafond Hauteur en haut de l'appareil: 54" / 1370 mm

PARTS LIST

You will require the following components with your new Regency Direct Vent Freestanding Gas Stove. Please review your product to make sure you have everything you need. In the event that you are missing any part, contact your dealer.

NOTE: These are the minimum pieces required. Other parts may be required for your particular installation. See page 12 for a list of vent parts.

Minimum components for a Horizontal Installation:

A) Horizontal Termination Kit
B) Wall Penetration Heat Shield*
C) Vinyl Siding Standoff

Minimum components for a Vertical Termination:

D) Vertical Termination Kit
See page 12 for pipe lengths.

*not required in the U.S.

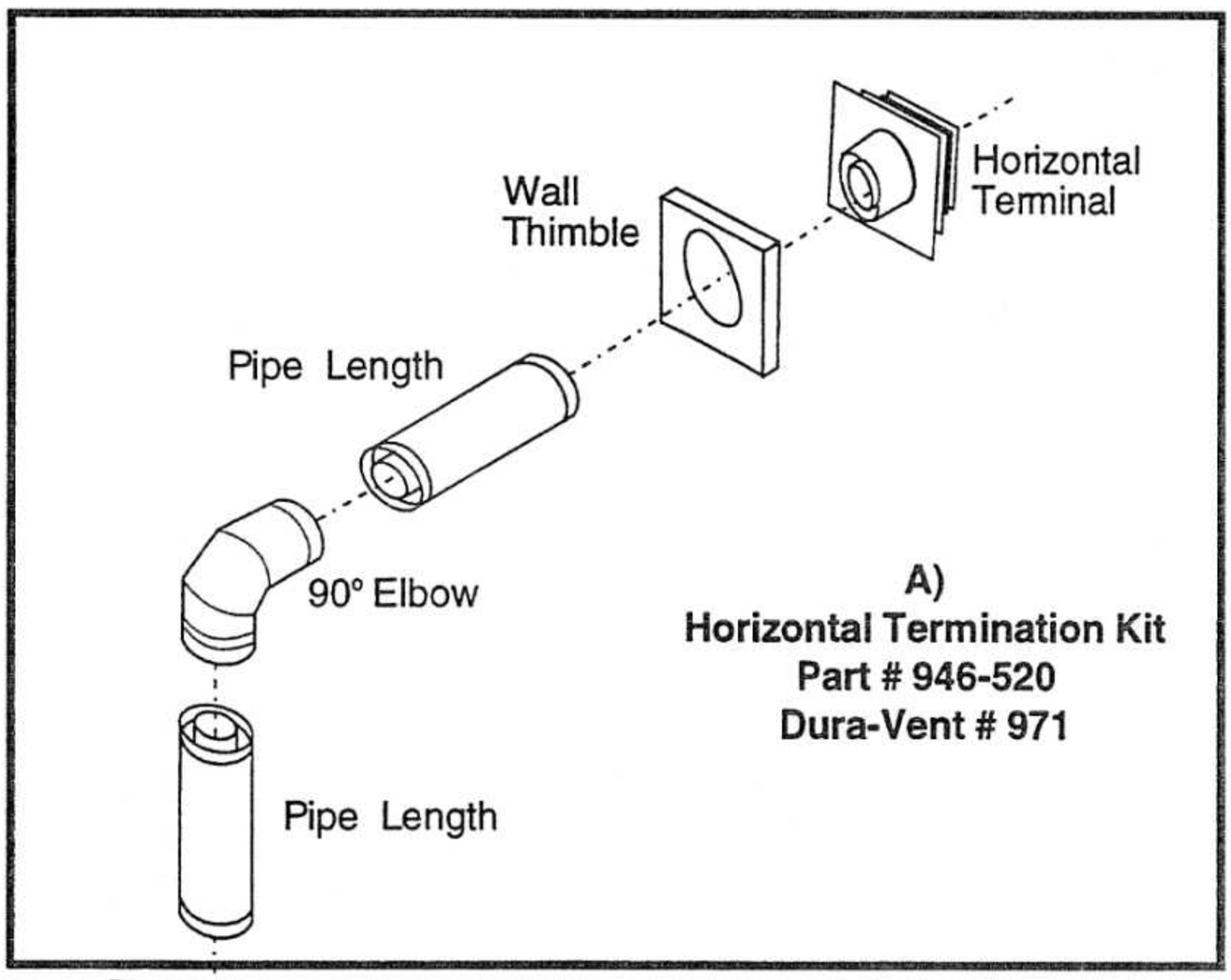

A)
Horizontal Termination Kit
Part # 946-520
Dura-Vent # 971

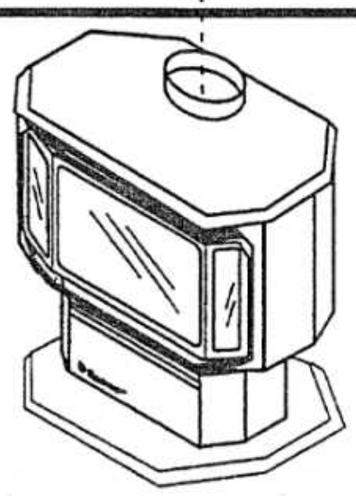

ULTIMATE
Direct Vent
Freestanding
Gas Stove

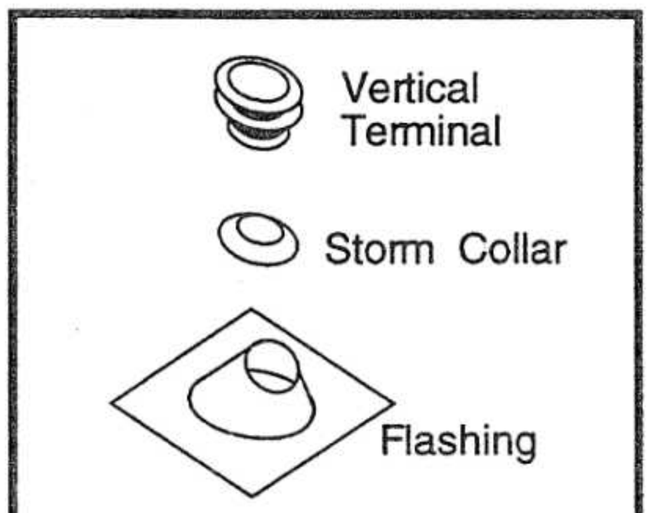

D)
Vertical Termination Kit
Part # 946-522
Dura-Vent # 973

C)
Part # 946-548
Dura-Vent # 950

B)
Part # 620-926
(not required in the U.S.)

INSTALLATION

IMPORTANT: SAVE THESE INSTRUCTIONS

The ULTIMATE Direct Vent Freestanding Gas Stove must be installed in accordance with these instructions. Carefully read all the instructions in this manual first. Consult the building authority having jurisdiction to determine the need for a permit prior to starting the installation.

NOTE: Failure to follow the instructions could cause a malfunction of the heater which could result in death, serious bodily injury, and/or property damage. Failure to follow these instructions may also void your fire insurance and/or warranty.

NOTE: These instructions take precedence over Simpson Dura-Vent instructions.

GAS PIPE TESTING

The appliance must be isolated from the gas supply piping system by closing its individual manual shut-off valve during any pressure testing of the gas supply piping system at test pressures equal to or less than 1/2 psig. (3.45 kPa).

SPECIFICATIONS

Fuels: is approved for use with natural gas.
U45-NG/U46-NG
is approved for use with liquefied petroleum gases (propane)
U45-LP/U46-LP

Electrical: 115 V.A.C. system.

Circulation Fan: Two speed, 140 CFM.
Log Sets: Ceramic fibre, 4 per set.

Vent System: Coaxial (6-5/8" outer / 4" inner liner) rigid flue and termination cap.

BEFORE YOU START

Safe installation and operation of this appliance requires common sense, however, we are required by the Canadian Safety Standards and ANSI Standards to make you aware of the following:

THIS APPLIANCE SHOULD BE INSTALLED, REPAIRED, INSPECTED BEFORE USE AND AT LEAST ANNUALLY BY A QUALIFIED SERVICE PERSON. MORE FREQUENT CLEANING MAY BE REQUIRED DUE TO EXCESSIVE LINT FROM CARPETING, ETC. IT IS IMPERATIVE THAT THE CONTROL COMPARTMENT, BURNERS AND CIRCULATING AIR PASSAGEWAYS OF THE APPLIANCE BE KEPT CLEAN.

DUE TO HIGH TEMPERATURES, THE APPLIANCE SHOULD BE LOCATED OUT OF TRAFFIC AND AWAY FROM FURNITURE AND DRAPERIES.

WARNING: FAILURE TO INSTALL THIS APPLIANCE CORRECTLY MAY CAUSE A SERIOUS HOUSE FIRE AND WILL VOID YOUR WARRANTY.

CHILDREN AND ADULTS SHOULD BE ALERTED TO THE HAZARDS OF HIGH SURFACE TEMPERATURES, ESPECIALLY THE FIREPLACE GLASS, AND SHOULD STAY AWAY TO AVOID BURNS OR CLOTHING IGNITION.

YOUNG CHILDREN SHOULD BE CAREFULLY SUPERVISED WHEN THEY ARE IN THE SAME ROOM AS THE APPLIANCE.

CLOTHING OR OTHER FLAMMABLE MATERIAL SHOULD NOT BE PLACED ON OR NEAR THE APPLIANCE.

1) Provide adequate clearances for servicing, proper operation and around the air openings into the combustion chamber.

2) The appliance must be installed on a flat, solid, continuous surface (e.g. wood, metal, concrete). This may be the floor, or it can be raised up on a platform to enhance its visual impact. If the appliance is going to be installed on carpeting, tile or other combustible material other than wood flooring, the appliance must be installed on a metal or wood panel extend-

ing the full width and depth of the appliance. The ULTIMATE Direct Vent Freestanding Gas Stove can be installed in a wide variety of ways and will fit nearly any room layout. It may be installed in a recessed position, framed out into the room, or across a corner.

3) The ULTIMATE Direct Vent Freestanding Gas Stove is approved for alcove installations, which meet the clearances listed on page 8. This unit can be installed in a bedroom, when installed with a millivolt thermostat. This unit approved for manufactured home installations, see pages 10 and 11 for the required vent arrangements. If installed into a manufactured home the unit must be bolted down to the floor.

4) We recommend that you plan your installation on paper using exact measurements for clearances and floor protection before actually installing this appliance. Have a qualified building inspector review your plans before installation.

GENERAL SAFETY INFORMATION

1) The appliance installation must conform with local Canadian Electrical Code.

2) The appliance when installed, must be electrically grounded in accordance with local codes, or in the absence of local codes with the current National Electrical Code, ANSI/NFPA 70 or CSA C22.1 Canadian Electrical Code.

3) The appliance should be inspected for shipping damage before use and serviced annually by a professional service person. More frequent cleaning may be required due to excessive lint from carpeting, bedding material, etc. It is imperative that control compartments, and circulating air passageways of the appliance be kept clean and free from excessive lint from carpeting.

4) See general construction and assembly instructions. The appliance and vent should be enclosed when installed in or passing through a living area, where children may come in contact with it.

5) This appliance must be connected to the specified vent and termination cap to the outside of the building envelope. Never vent to another room or inside a building. Make sure that the vent is fitted as per the instructions on starting on page 8.

6) Inspect the venting system annually for blockage and any signs of deterioration.

7) Venting terminals shall not be recessed into a wall or siding.

8) Any safety glass removed for servicing must be replaced prior to operating the appliance.

9) To prevent injury, do not allow anyone who is unfamiliar with the operation to use the fireplace.

LOCATING YOUR ULTIMATE GAS STOVE

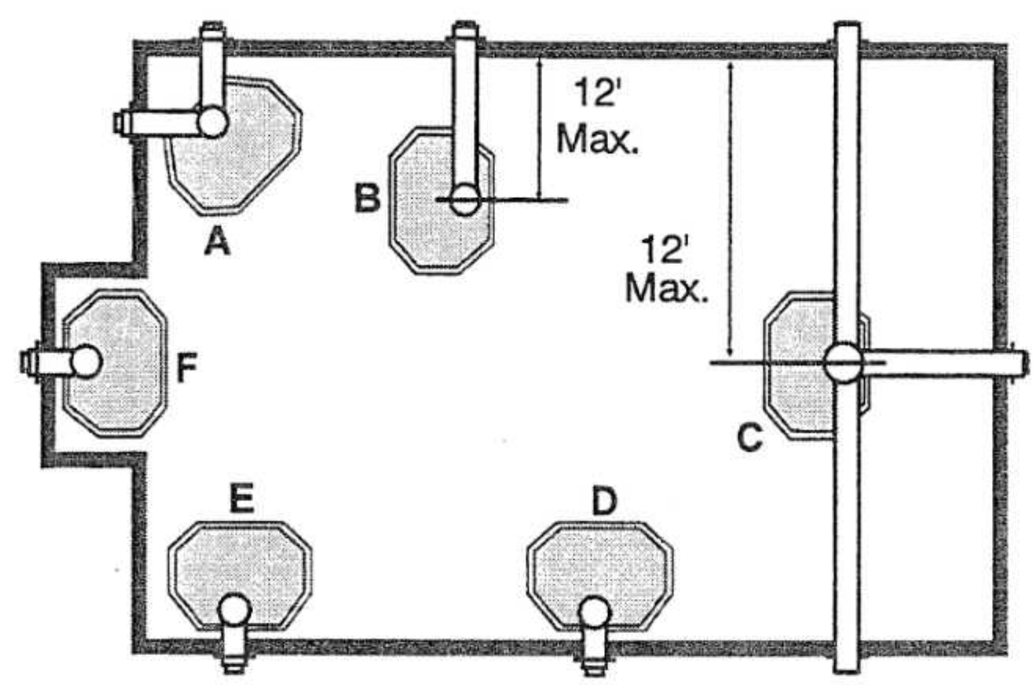

When selecting a location for your stove, ensure that the clearances listed above are met as well as ensuring that there is adequate accessibility for servicing and proper operation.

A) Cross Corner
B) Room Divider
C) Island
D) Flat on Wall
E) Flat on Wall Corner
F) Flush with Wall/Alcove

For Vent Termination requirements, see page 9.

INSTALLATION

CLEARANCES TO COMBUSTIBLES

The clearances listed below are MINIMUM distances. Measure the clearance to both the appliance and the chimney connector. The farthest distance is correct if the two clearances do not coincide.

For example, if the appliance is set as indicated in one of the figures but the connector is too close, move the stove until the correct clearance to the connector is obtained.

This appliance may be installed only with the clearances as shown in the situations pictured. Do not combine clearances from one type of installation with another in order to achieve closer clearances.

Use the minimum clearances shown in the diagrams below:

A	Side Wall to Unit	7-1/2" / 190 mm
B	Back Wall to Unit	4" / 100 mm
C	Back Wall to Flue Centerline	11" / 280 mm
D	Side Wall to Flue Centerline	22" / 560 mm
E	Side Wall to Unit	2" / 50 mm
F	Side Wall to Flue Centerline	12" / 305 mm

Minimum ceiling height is 54" / 1370 mm from top of unit.

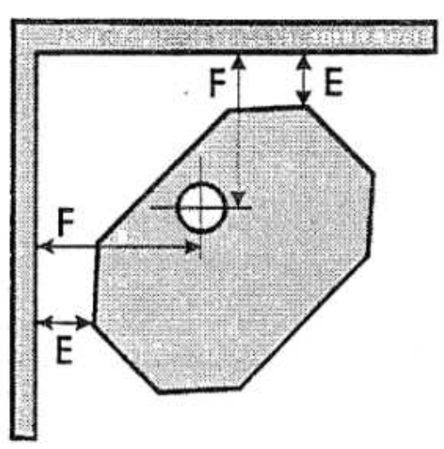

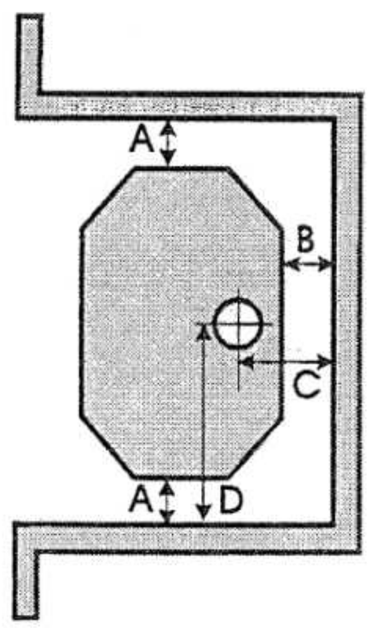

COMBUSTION AND VENTILATION AIR

The combustion air from this appliance is drawn from outside the building through the outer flue. **Extra provision for combustion air inside the room is not required.**

VENTING

These instructions apply to the Simpson Dura-Vent Direct Vent System Model DV-GS. This venting system, in combination with the ULTIMATE Direct Vent Free-standing Gas Stove, U45-NG/U46-NG and U45-LP/U46-LP, has been tested and listed as a direct vent heater system by Warnock Hersey.

IMPORTANT

Read all instructions carefully before starting the installation. Failure to follow these instructions may create a fire or other safety hazard, and will void the warranty. Be sure to check the venting and clearance to combustible requirements on pages 8, 9, 10 and 11. Consult your local building codes before beginning installation.
The location of the termination cap must conform to the requirements in the Exterior Vent Terminal Locations diagram on page 9.

INSTALLATION PRECAUTIONS

The Simpson Dura-Vent Direct Vent System is an engineered product that has been designed and tested for use with the U45-NG/U46-NG & U45-LP/U46-LP. The Simpson Dura-Vent warranty will be voided and serious fire, health or other safety hazards may result from any of the following actions:

1) Installation of any damaged Direct Vent component
2) Unauthorized modification of the Direct Vent System
3) Installation of any component part not manufactured or approved by Simpson Dura-Vent or Regency Industries Ltd.
4) Installation other than as instructed by Simpson Dura-Vent and Regency Industries Ltd.

Warning: Always maintain required clearances (air spaces) to nearby combustibles to prevent a fire hazard. Do not fill air spaces with insulation. The minimum clearance requirements between the outer wall of the vent pipe and nearby combustible surfaces is 1-1/4 inch. Be sure to check the vent termination clearance requirements from decks, windows, soffits, gas regulators, air supply inlets and public walkways as specified on page 9 and in your local building codes.

EXTERIOR VENT TERMINAL LOCATIONS

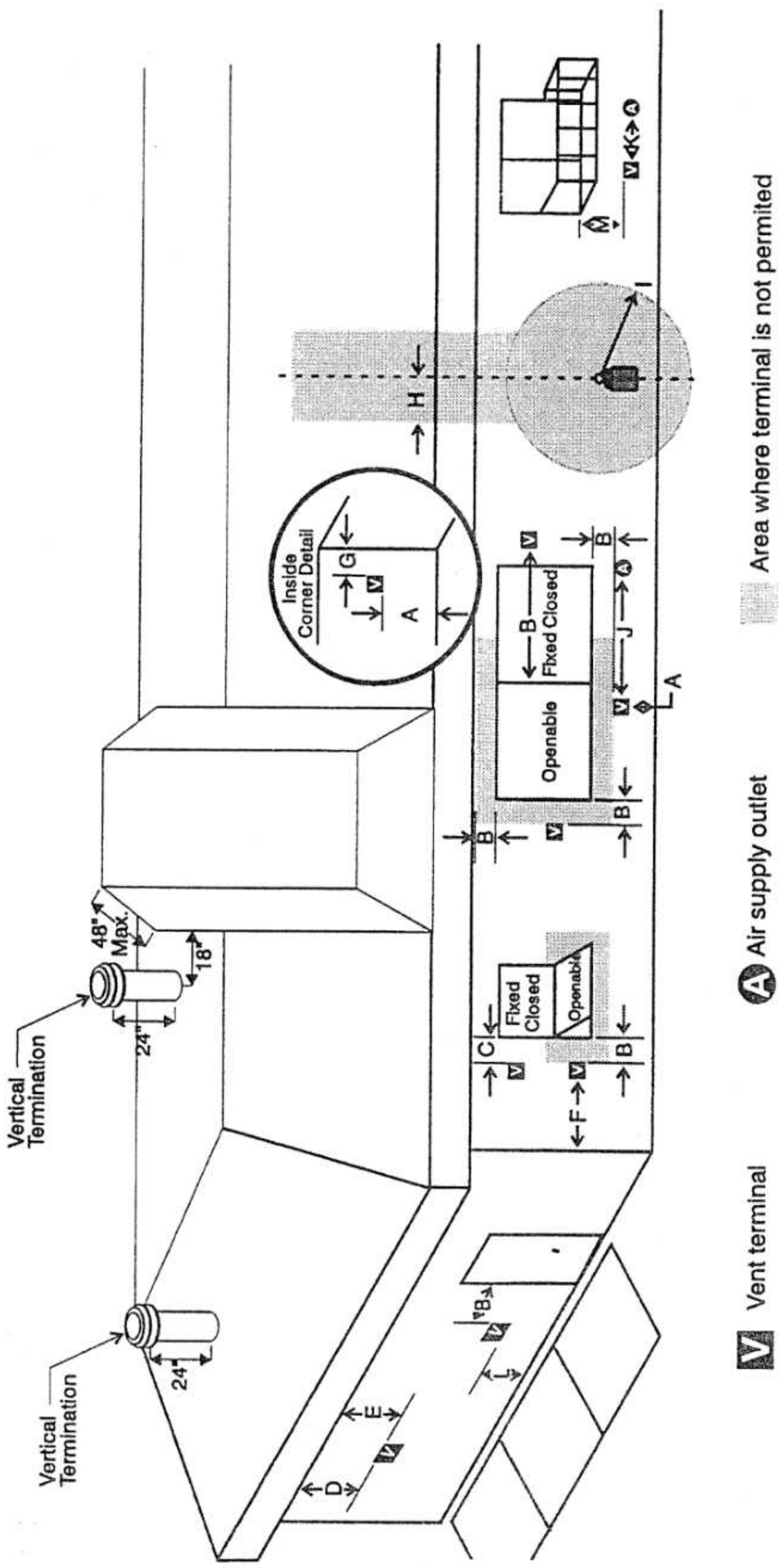

A = CLEARANCE TO OUTSIDE CORNER 12" (55 CM)
B = CLEARANCE TO INSIDE CORNER 12" (55 CM)
C = *NOT TO BE INSTALLED ABOVE A METER/REGULATOR ASSEMBLY WITHIN 3 FEET (90 CM) HORIZONTALLY FROM THE CENTRE-LINE OF THE REGULATOR
D = VERTICAL CLEARANCE TO SERVICE REGULATOR VENT OUTLET [*6 FEET (1.8 M) MINIMUM]
E = CLEARANCE TO NON-MECHANICAL AIR SUPPLY INLET TO BUILDING OR THE COMBUSTION AIR INLET TO ANY OTHER APPLIANCE [*12 INCHES (30 CM)
L = CLEARANCE ABOVE GRADE, VERANDA, PORCH, DECK, OR BALCONY [*12 INCHES (30 CM) MINIMUM]
M = CLEARANCE TO WINDOW OR DOOR THAT MAY BE OPENED [*12 INCHES (30 CM)
† CLEARANCE TO A MECHANICAL AIR SUPPLY INLET [*6 FEET (1.8 M) MINIMUM]
CLEARANCE ABOVE PAVED SIDE-WALK OR A PAVED DRIVEWAY LOCATED ON PUBLIC PROPERTY [*7 FEET (2.1 M) MINIMUM]
CLEARANCE UNDER VERANDA, PORCH,, DECK, OR BALCONY [*12 INCHES (30 CM) MINIMUM]
A VENT SHALL NOT TERMINATE DIRECTLY ABOVE A SIDE-WALK OR PAVED DRIVEWAY WHICH IS LOCATED BETWEEN TWO SINGLE FAMILY DWELLINGS AND SERVES BOTH DWELLINGS*.
ONLY PERMITTED IF VERANDA, PORCH, DECK OR BALCONY, IS FULLY OPEN ON A MINIMUM OF 2 SIDES BENEATH THE FLOOR.*
AS SPECIFIED IN CGA B149 INSTALLATION CODES (1991) **NOTE:** LOCAL CODES OR REGULATIONS MAY REQUIRE DIFFERENT CLEARANCES.

VENTING ARRANGEMENTS - HORIZONTAL TERMINATIONS

The shaded areas in the four diagrams below show all allowable combinations of vertical runs with horizontal terminations. Maximum one 90° elbow.

RESIDENTIAL INSTALLATION

Venting ENCLOSED in a Chase (min. size 9" x 9")

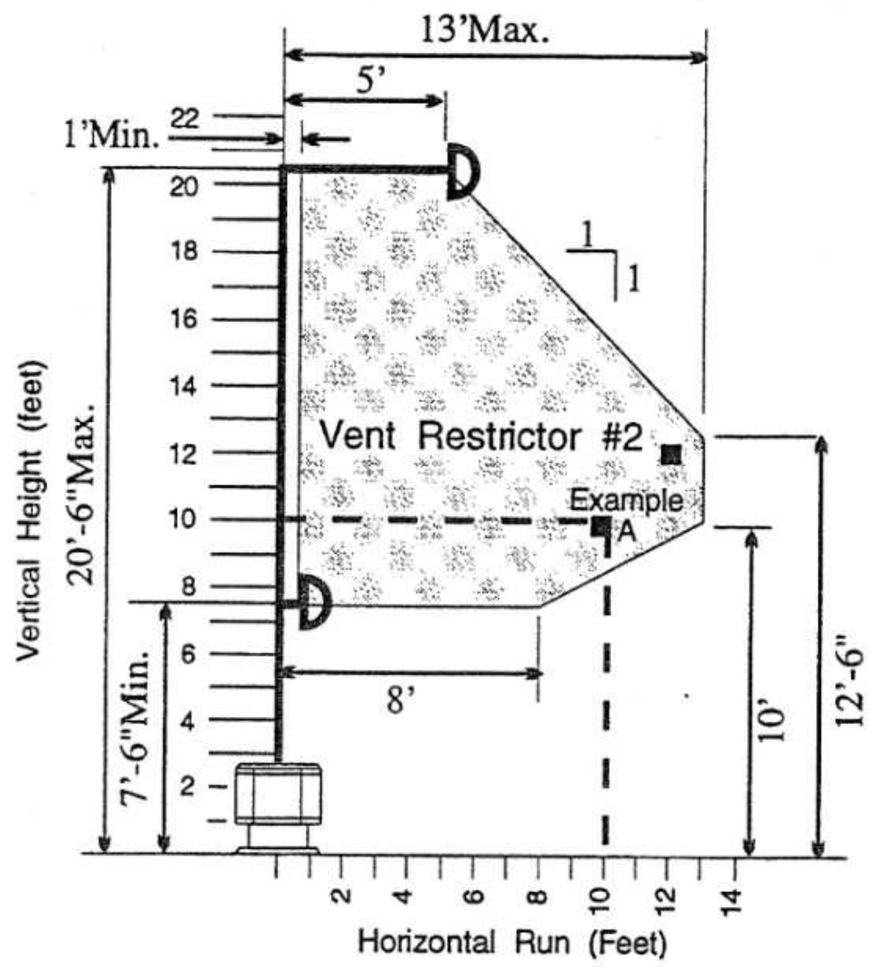

Venting NOT ENCLOSED in a Chase

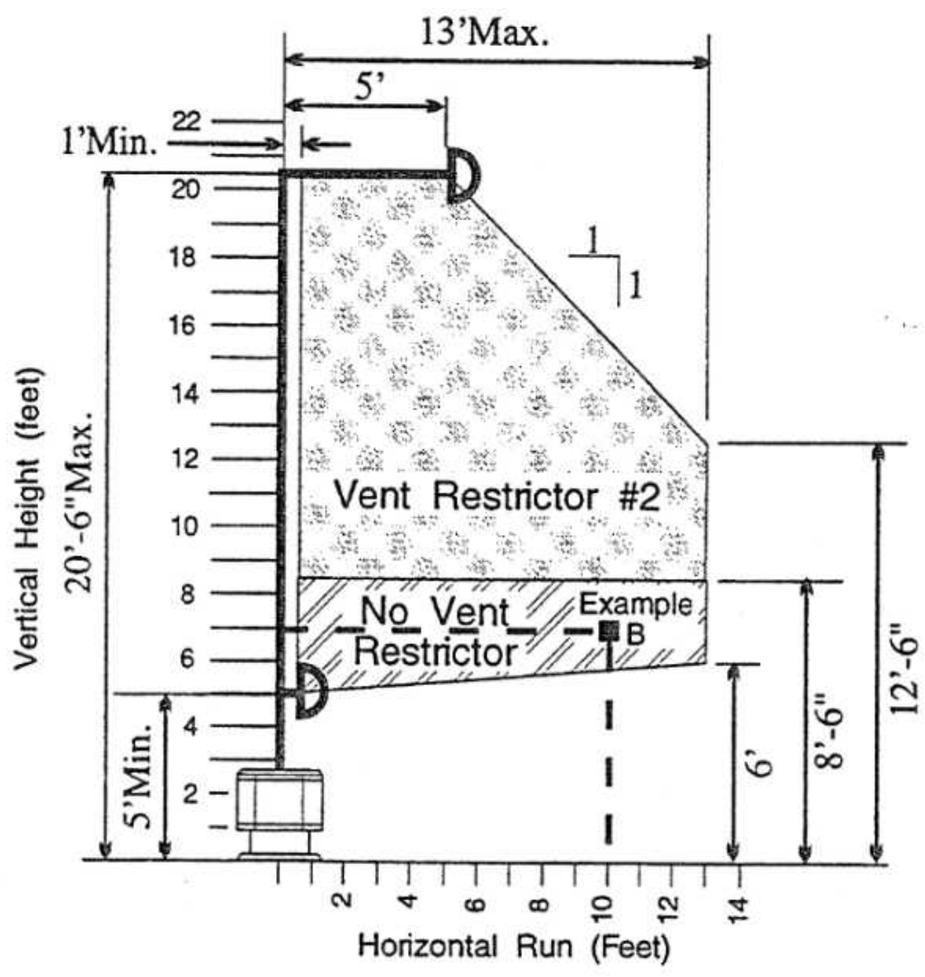

NOTE: See page 14 for installation instructions for the Vent Restrictors. These must be installed before the pipe is connected to the unit. The vent restrictors are shipped inside the stove.

MANUFACTURED HOMES / MOBILE HOMES INSTALLATIONS

The venting arrangements diagrammed below, have a minimum of 75% (flue loss) efficiency with Fan Off, as required for manufactured homes. (Actual efficiency may be as high as 85%.)

Venting ENCLOSED in a Chase (min. size 9" x 9")

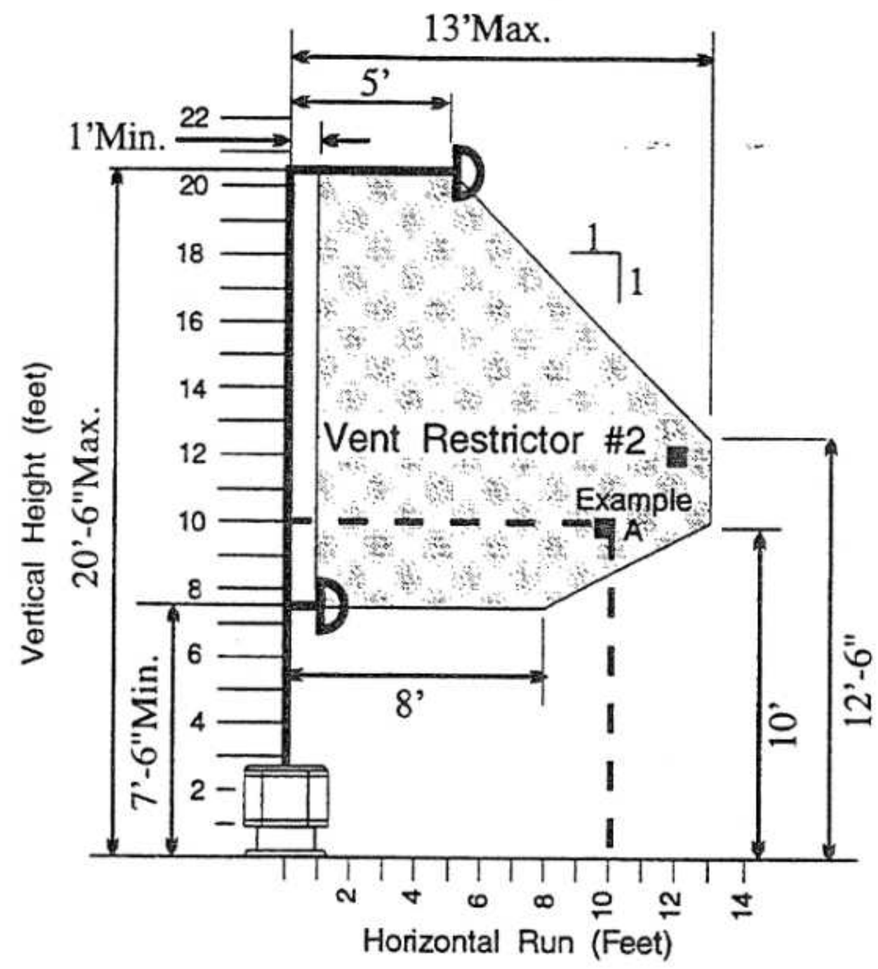

Venting NOT ENCLOSED in a Chase

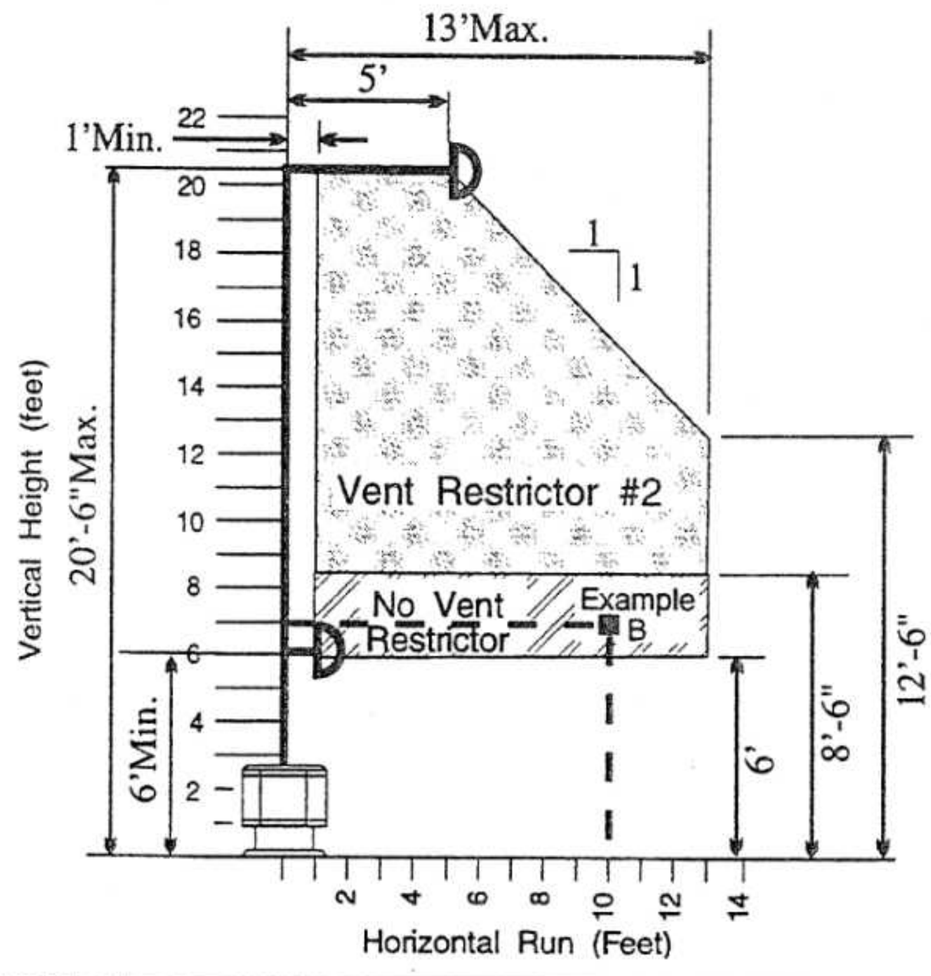

VENTING ARRANGEMENTS - VERTICAL TERMINATIONS FOR BOTH RESIDENTIAL & MANUFACTURED HOMES/MOBILE HOMES

The shaded areas in the two diagrams below show all allowable combinations of straight vertical and offset to vertical runs with vertical terminations. Maximum two 45° elbows. All vertical and offset to vertical vent installations require Vent Restrictor #1. If the vent is ENCLOSED in a chase (min. size 9" x 9") maintain a 1-1/4" clearance to combustibles.

STRAIGHT VERTICAL TERMINATIONS (Vent Restrictor #1)

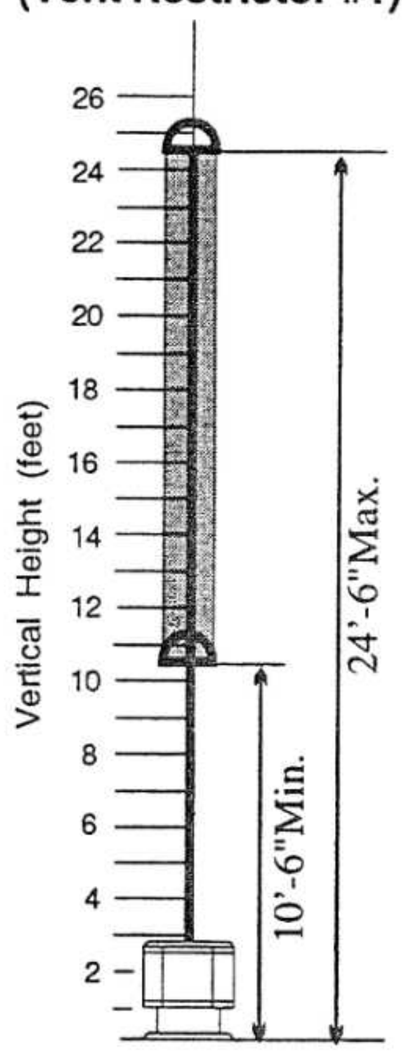

OFFSET TO VERTICAL TERMINATIONS (Vent Restrictor #1)

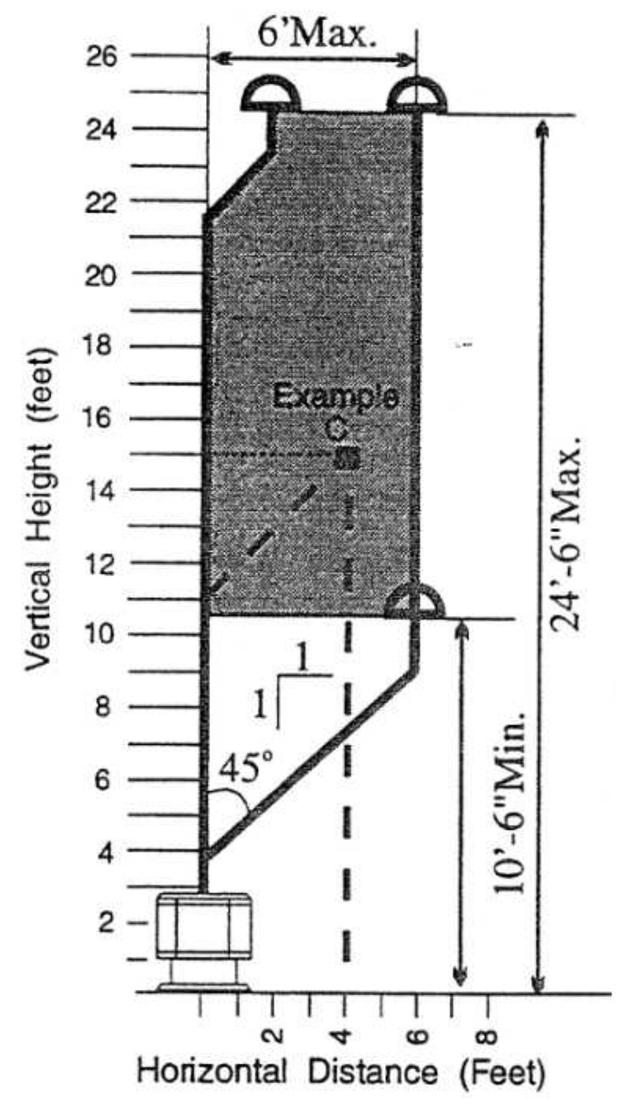

	If you are terminating within this shaded area Vent Restrictor #2 must be used.
	If you are terminating within this shaded area no Vent Restrictor is required.
	If you are terminating within this shaded area Vent Restrictor #1 must be used.

VENTING ARRANGEMENTS EXAMPLES:

Example A) Venting enclosed in a chase with horizontal termination.
A 10 ft. vertical run with 10 ft. horizontal run falls within the shaded area, and therefore is an allowable installation with Vent Restrictor #2.

Example B) Venting is not enclosed and has a horizontal termination.
A 7 ft. vertical run with 10 ft. horizontal run falls within the shaded area, and therefore is an allowable installation with no vent restrictor required.

Example C) Offset to Vertical Vent - Venting is enclosed in a chase with vertical termination.
A 15 ft. vertical run with 4 ft. horizontal offset distance falls within the shaded area and is an allowable installation with Vent Restrictor #1.

INSTALLATION

The gas appliance and vent system must be vented directly to the outside of the building, and never be attached to a chimney serving a separate solid fuel or gas-burning appliance. Each direct vent gas appliance must use it's own separate vent system. Common vent systems are prohibited.

SAFETY PRECAUTIONS FOR THE INSTALLER

1) Wear gloves and safety glasses for protection.
2) Exercise extreme caution when using ladders or on roof tops.
3) Be aware of electrical wiring locations in walls and ceilings.

PLANNING YOUR INSTALLATION

There are two basic types of Direct Vent System installations: horizontal termination and vertical termination, see page 13. Confirm the maximum horizontal run and maximum vertical rise from the diagrams on pages 10 and 11.

When planning your installation, it will be necessary to select the proper length of vent pipe for your particular requirements. For horizontal installations, determine the minimum clearance from the rear of the unit to the wall. It is also important to note the wall thickness. Select the amount of vertical rise desired for "vertical-to-horizontal" type installations.

To determine the length of vent pipe required for vertical installations, measure the distance from the unit flue outlet to the ceiling, the ceiling thickness, the vertical rise in an attic or second storey, and allow for sufficient vertical height above the roof line.

For two-storey applications, fire stops are required at each floor level. If an offset is needed in the attic, additional pipe and elbows will be required.

Do not exceed the maximum number of elbows. One 90° for horizontal terminations and two 45° for vertical termination.

PARTS LIST

The Simpson Dura-Vent Direct Vent System offers a complete line of component parts for installation of both horizontal and vertical installation. Many items are offered in decorative black, as well as galvanized finish. The galvanized pipe and fittings are used for concealed locations such as attics or spaces where corrosion is a factor, such as above the roof line. Decorative brass or chrome trim kits are available for both wall thimbles and ceiling support boxes.

Regency Part #	Simpson DV Stock #	Description
946-520	971	Horizontal Termination Kit A
946-522	973	Vertical Termination Kit
946-548	950	Vinyl Siding Standoff
946-531	908B	6" Pipe Length (black)
946-532	907B	9" Pipe Length (black)
620-933	906	12" Pipe Length (galvanized)
946-534	906B	12" Pipe Length (black)
620-935	904	24" Pipe Length (galvanized)
946-536	904B	24" Pipe Length (black)
620-937	903	36" Pipe Length (galvanized)
946-538	903B	36" Pipe Length (black)
620-939	902	48" Pipe Length (galvanized)
946-540	902B	48" Pipe Length (black)
946-541	911B	11"-14 5/8" Adjustable Pipe Length (black)
620-945	945	45° Elbow (galvanized)
946-543	945B	45° Elbow (black)
620-944	990	90° Elbow (galvanized)
946-545	990B	90° Elbow (black)
946-546	984	Horizontal Square Termination Cap
946-547	983	Vertical Termination Cap*
946-549	940	Round Ceiling Support Box/ Wall Thimble
946-550	941	Cathedral Ceiling Support Box
946-551	953	Storm Collar
620-952	963	Fire stop Spacer
620-953	943	Flashing 0/12-6/12
620-954	943S	Flashing 7/12-12/12
620-988	988	Wall Strap

Parts not supplied by Dura-Vent

620-926	--	Wall Penetration Heat Shield - not required in the U.S.A.

* *Under high wind conditions -contact:*

Regency Industries Service Dept.

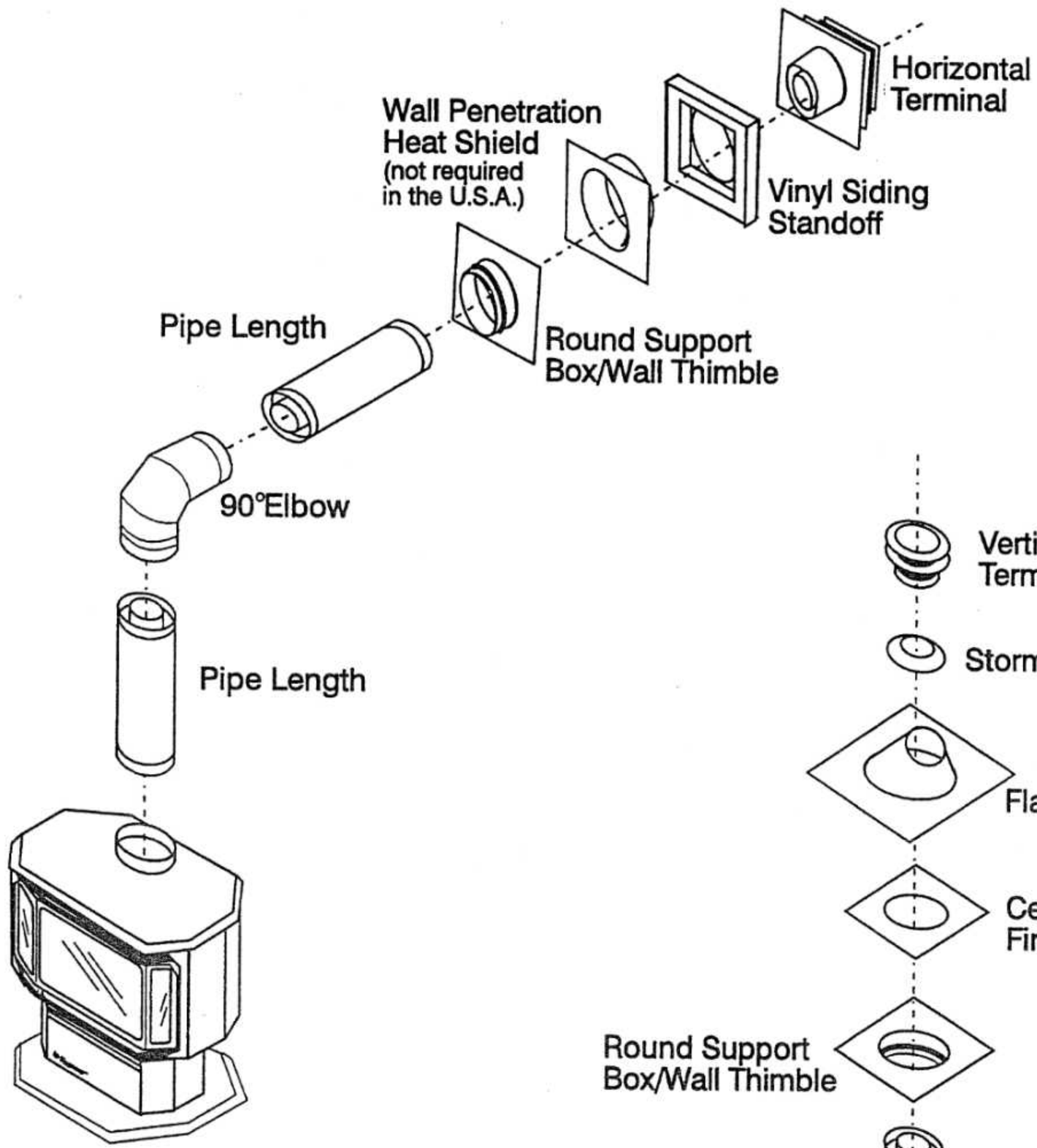

Horizontal Termination Installation

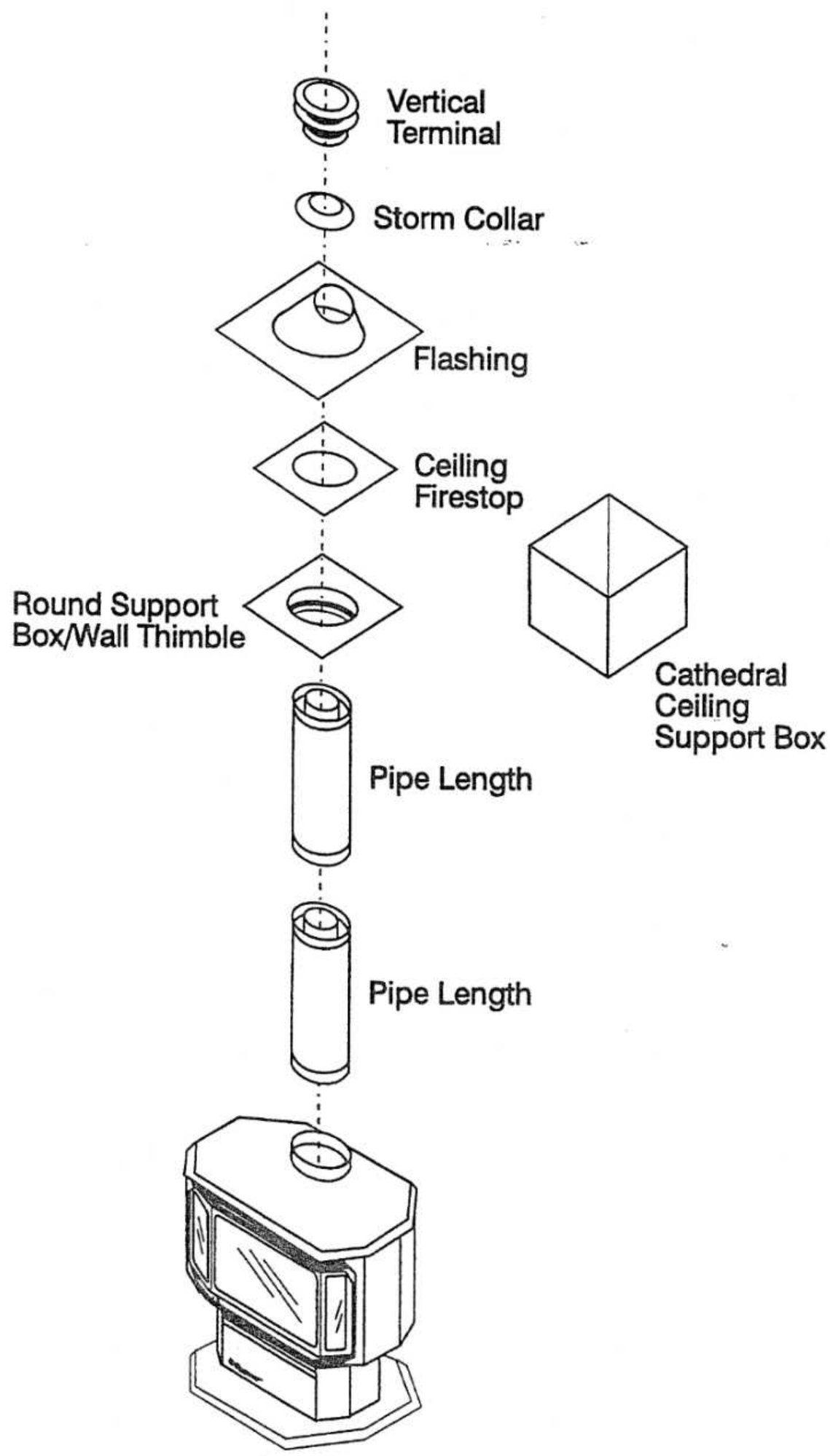

Vertical Termination Installation

VENT RESTRICTORS #1 AND #2

Vent restrictors are required for certain venting installations, see the diagrams on pages 10 and 11 to determine if they are required for your installation. The two vent restrictors are supplied with your unit. If a vent restrictor is required **it must be installed prior to connecting the pipe to the twist-lock appliance adaptor.**

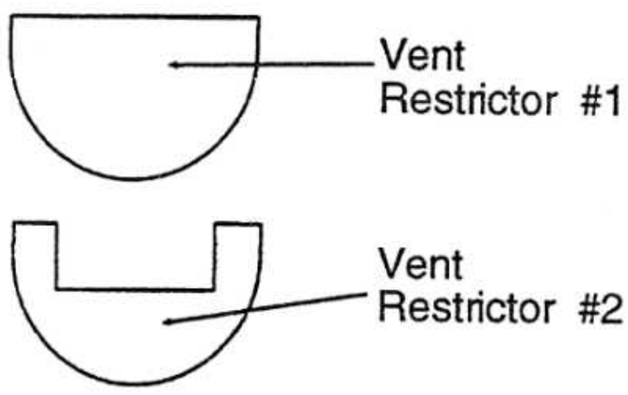

Slide the restrictor into the adaptor collar and push the tabs down between the inner flue collar and the inside pipe of the twist-lock appliance adaptor. See the diagram below.

The same procedure is used for vent restrictor #2.

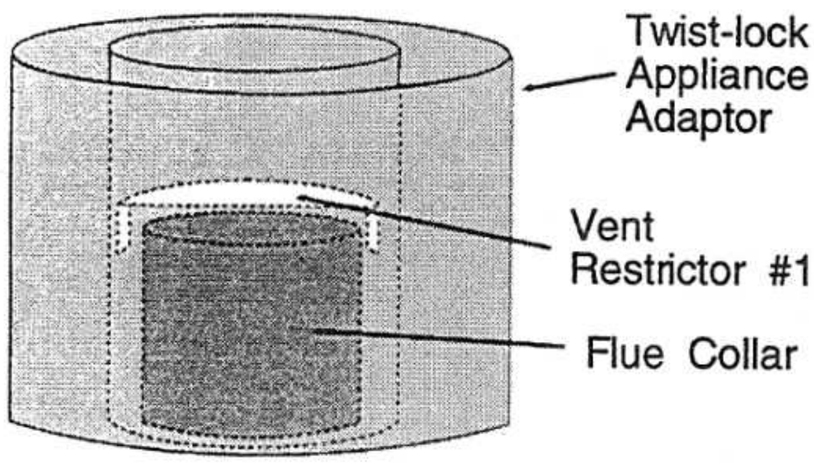

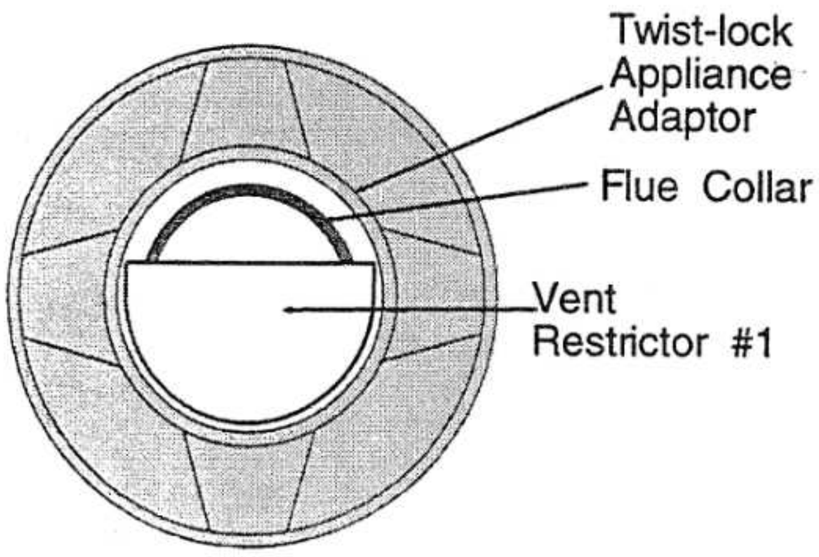

HORIZONTAL INSTALLATIONS

1) Set the unit in its desired location. Check to determine if wall studs or roof rafters are in the way when the venting system is attached. If this is the case, you may want to adjust the location of the unit.

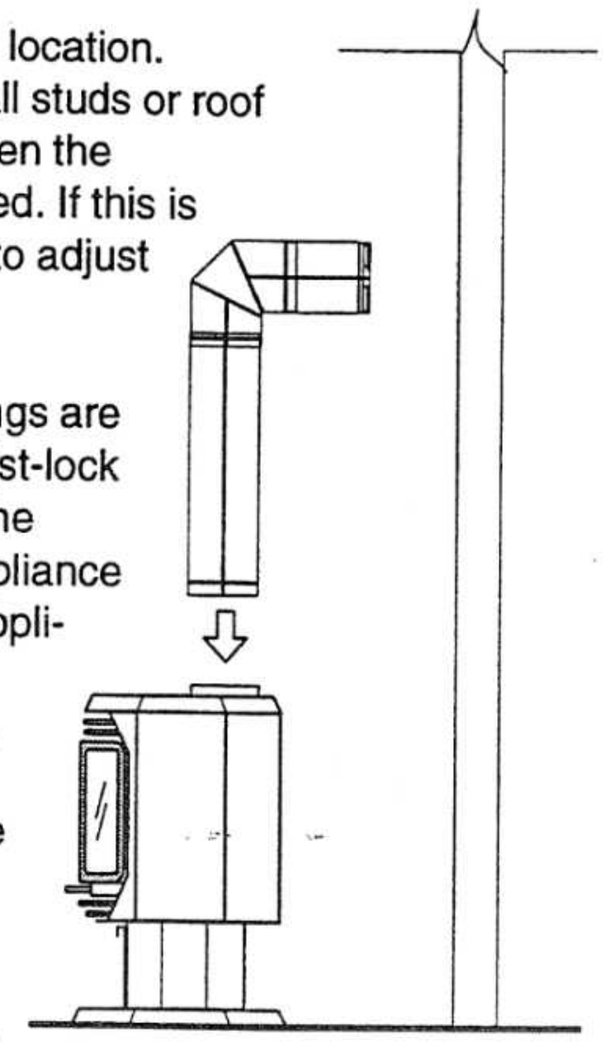

2) Direct Vent pipe and fittings are designed with special twist-lock connections to connect the venting system to the appliance flue outlet. A twist-lock appliance adaptor is installed on the unit at the factory. Assemble the desired combination of black pipe and elbows to the appliance adaptor with pipe seams oriented towards the wall or floor, as much out of view as possible. The final positioning of the pipe and 90° elbow assembly is determined by the mounting orientation of the adaptor on the stove and twist-locked for a solid connection.

NOTE:

a) Twist-lock procedure: Four indentations, located on the female ends of pipes and fittings, are designed to slide straight onto the male ends of adjacent pipes and fittings, by orienting the four pipe indentations so they match and slide in to the four entry slots on the male ends. (Fig. 1) Push the pipe sections completely together, then twist-lock one section clockwise approximately one-quarter turn, until the two sections are fully locked. The female locking lugs will not be visible for the outside, on the Black Pipe or fittings. They may be located by examining the inside of the female ends.

Apply sealant "Stove Mate" to inner pipe and high temp silicone sealant to outer pipe on every twist-lock joint.

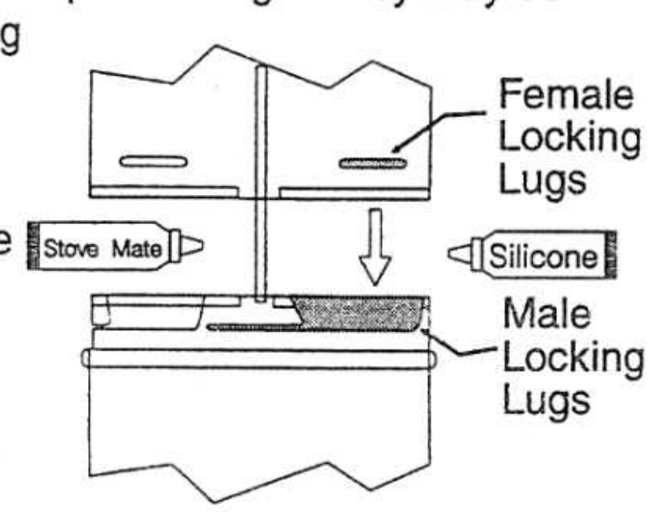

Fig. 1

b) Horizontal runs of vent must be supported every three feet. Wall straps are available for this purpose.

3) With the pipe attached to the stove, slide the stove into its correct location, and mark the wall for a 10 inch x 10 inch square hole. The center of the square hole should line up with the center-line of the horizontal pipe, as shown in Fig. 2. Cut and frame the 10 inch square hole in the exterior wall where the vent will be terminated. If the wall being penetrated is constructed of noncombustible material, i.e. masonry block or concrete, a 7" diameter hole is acceptable.

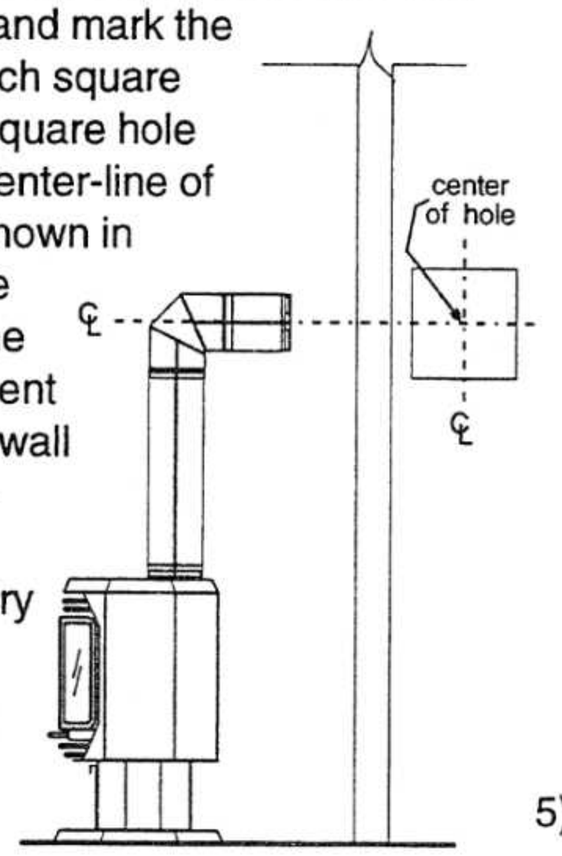

Fig. 2

NOTE:

a) The horizontal run of vent must be level, or have a 1/4 inch rise for every 1 foot of run towards the termination. Never allow the vent to run downward. This could cause high temperatures and may present the possibility of a fire.

b) The location of the horizontal vent termination on an exterior wall must meet all local and national building codes, and must not be easily blocked or obstructed. Termination clearances are diagrammed on page 9.

4) Attach the Vinyl Siding Standoff to the Horizontal Vent Termination, but first run a bead of non-hardening mastic around its outside edges, so as to make a seal between vent cap and the standoff. Install the Vinyl Siding Standoff (Part # 946-548, Dura-Vent # 950) between the vent cap and the exterior wall and attach with the four wood screws provided. Seal around the Vinyl Siding Standoff on all four sides. Fig. 3. **The arrow on the vent cap should be pointing up.** Insure that the 1-1/4 inch clearances to combustible materials maintained. Fig. 3.

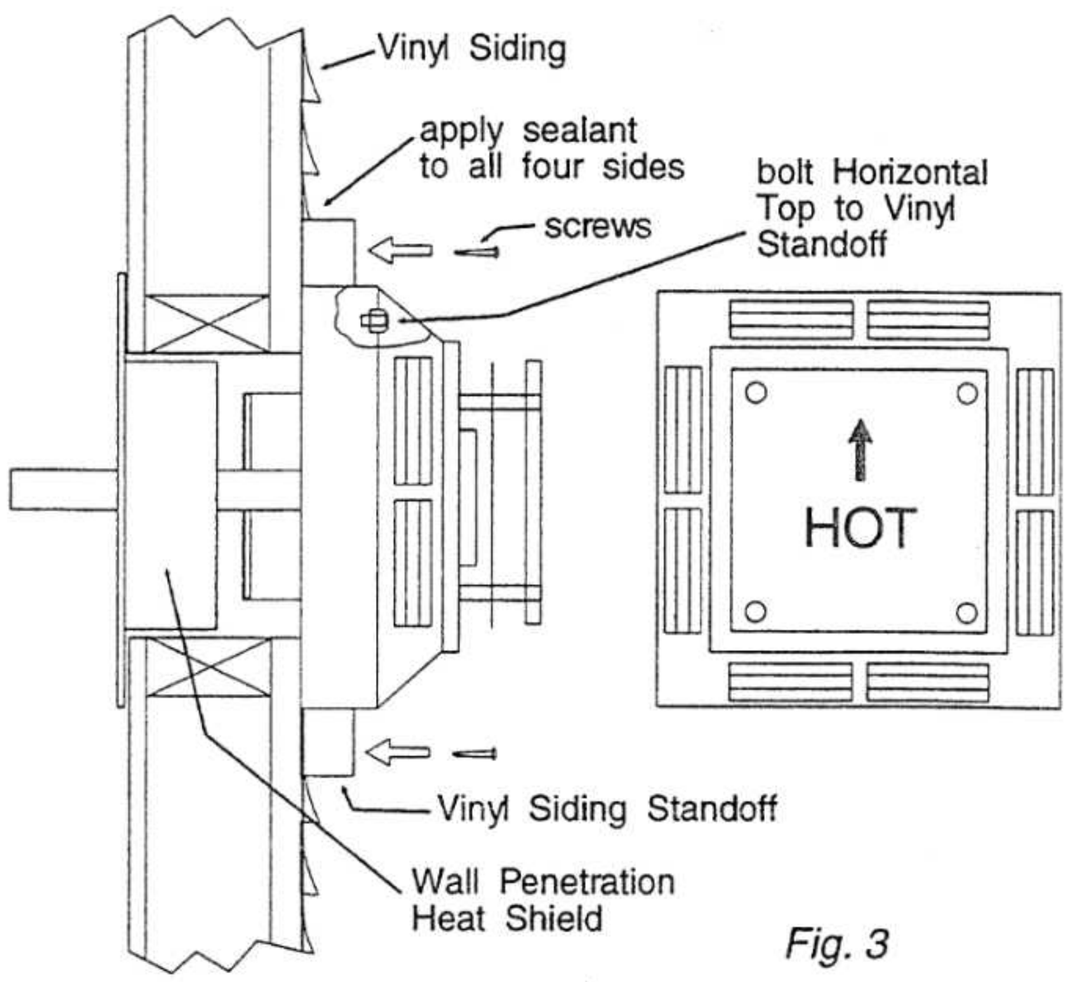

Fig. 3

NOTE: The Vinyl Siding Standoff is mandatory on all Horizontal Termination installations, even when the outer wall does not have vinyl siding.

The four wood screws provided should be replaced with appropriate fasteners for stucco, brick, concrete, or other types of sidings.

5) **For U.S. installations**: Before connecting the horizontal run of vent pipe to the vent termination, slide the black decorative wall thimble cover over the vent pipe and attach with wood screws.

For Canadian installations: Before connecting the horizontal run of vent pipe to the vent termination, slide the black decorative wall thimble cover over the vent pipe, then slide the Wall Penetration Heat Shield (Part # 620-926) over the vent pipe. Install Wall Penetration Heat Shield in the center of the 10 inch square and attach with wood screws.

6) Slide the appliance and vent assembly towards the wall carefully inserting the vent pipe into the vent cap assembly. It is important that the vent pipe extends into the vent cap sufficient distance so as to result in a minimum pipe overlap of 1-1/4 inches. Secure the connection between the vent pipe and the vent cap by attaching the two sheet metal strips extending from the vent cap assembly into the outer wall of the vent pipe. Use the two sheet metal screws pro- vided to connect the strips to the pipe section. Bend any remaining portion of the sheet metal strip back towards the vent cap, so it will be concealed by the decorative wall thimble cover. Fig. 4.

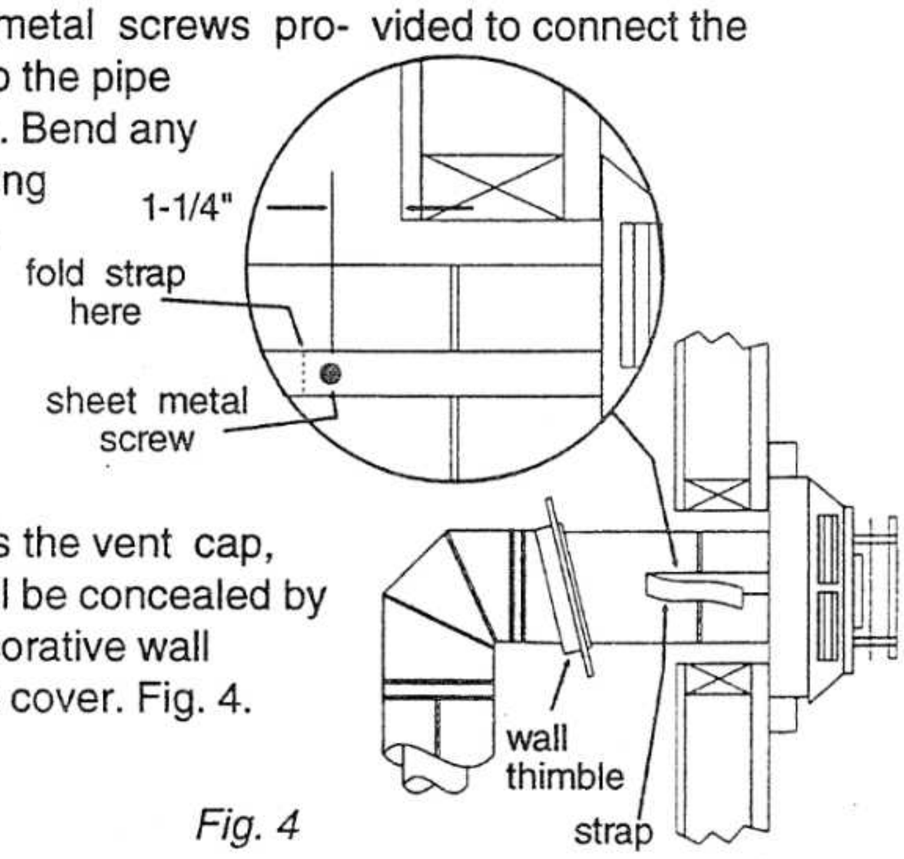

Fig. 4

7) Slide the decorative wall thimble up the wall surface and attach with screws provided. Apply decorative brass or chrome trim if desired. Fig. 5.

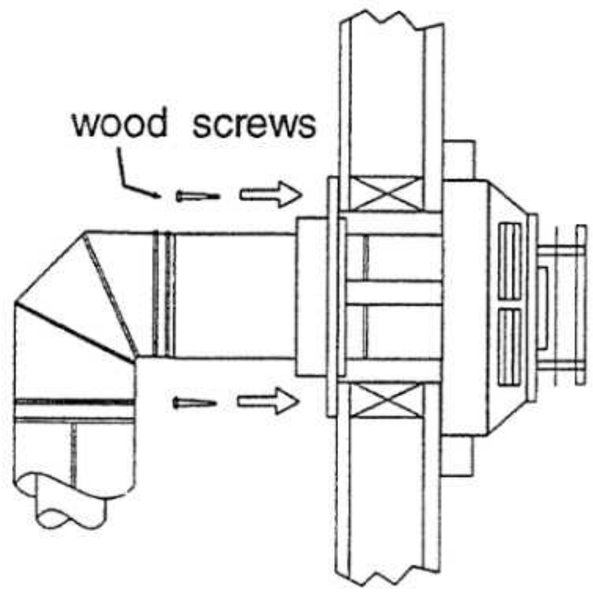

Fig. 5

VERTICAL TERMINATION

1) Maintain the 1-1/4" clearances (air spaces) to combustibles when passing through ceilings, walls, roofs, enclosures, attic rafter, or other nearby combustible surfaces. Do not pack air spaces with insulation. Check pages 10 and 11 for the maximum vertical rise of the venting system and the maximum horizontal offset limitations. Fig. 6.

2) Set the gas appliance in its desired location. Drop a plum bob down from the ceiling to the position of the appliance flue exit, and mark the location where the vent will penetrate the ceiling. Drill a small hole at his point. Next, drop a plumb bob from the roof to the hole previously drilled in the ceiling, and mark the spot where the vent will penetrate the roof. Determine if ceiling joists, roof rafters or other framing will obstruct the venting system. You may wish to relocate the appliance or to offset, as shown in Fig. 7 to avoid cutting load bearing members.

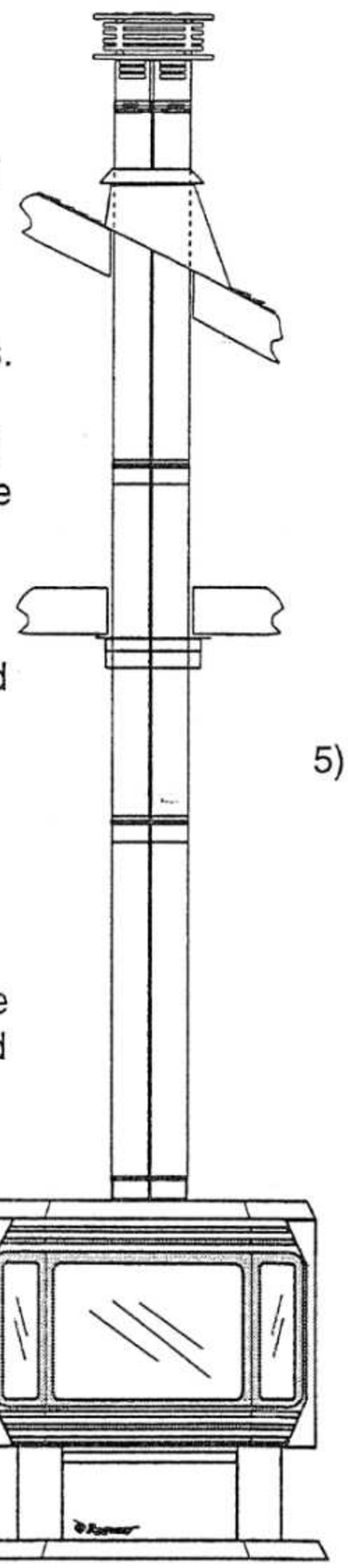

Fig. 6

3) To install the Round Support Box/Wall Thimble in a flat ceiling, cut a 10 inch square hole in the ceiling centered on the hole drilled in Step 2). Frame the hole as shown in Fig. 8.

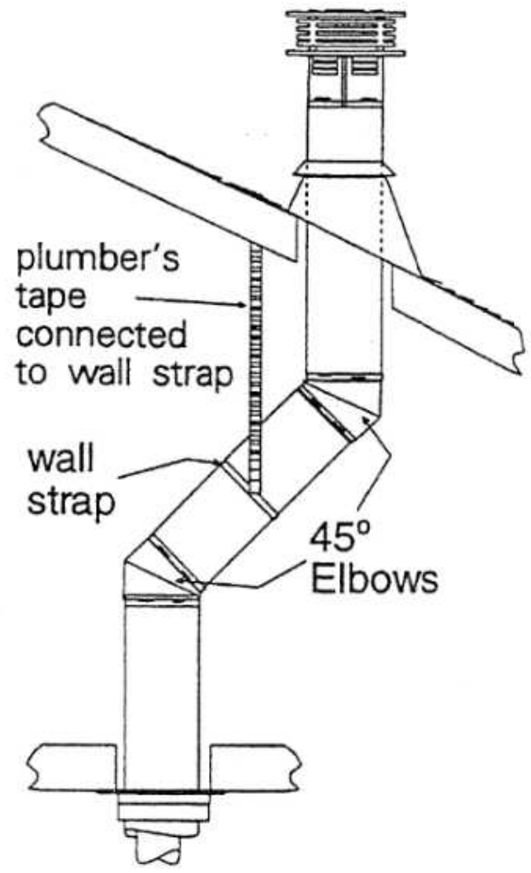

Fig. 7

4) Assemble the desired lengths of black pipe and elbows necessary to reach from the appliance adaptor up though the Round Support Box. Insure that all pipes and elbow connections are in the fully twist-locked position and sealed.

Fig. 8

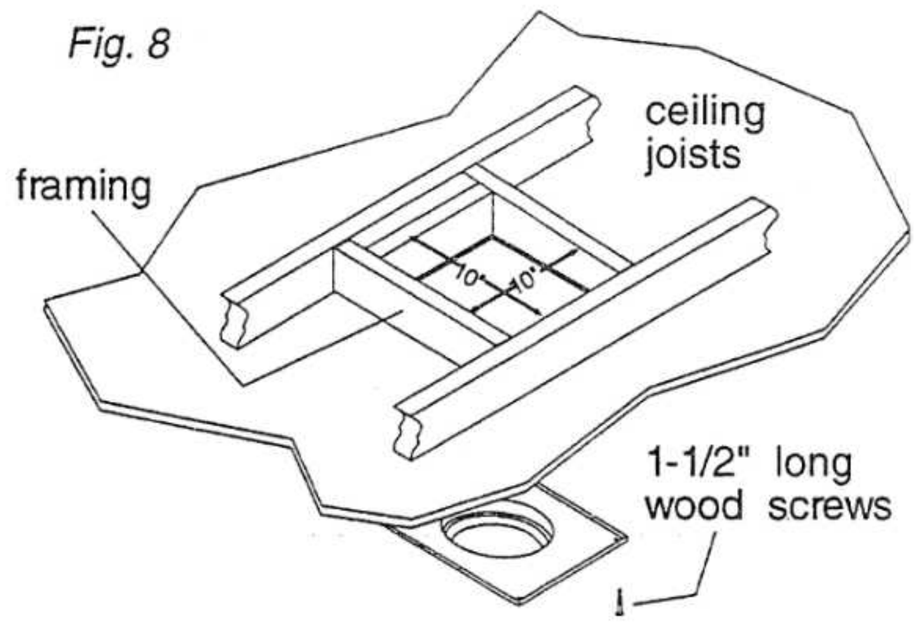

5) Cut a hole in the roof centered on the small drilled hole placed in the roof in Step 2). The hole should be of sufficient size to meet the minimum requirements for clearance to combustibles of 1-1/4". Continue to assemble lengths so pipe and elbows necessary to reach from the ceiling support Box up through the roof line. Galvanized Pipe and Elbows may be utilized in the attic as well as above the roof line. The galvanized finish is desirable above the roof line, due to its higher corrosion resistance.

NOTE: If an offset is necessary in the attic to avoid obstructions, it is important to support the vent pipe every 3 feet, to avoid excessive stress on the elbows, and possible separation. Wall Straps are available for this purpose. Fig. 7.

6) Slip the flashing over the pipe section(s) protruding through the roof. Secure the base of the flashing to the roof with roofing nails. Insure the roofing material overlaps the top edge of the flashing as shown in Fig. 9. Verify that you have at least the 1-1/4" minimum clearance to combustibles at the roof line. Slide the storm collar over the pipe section and seal.

Fig. 9

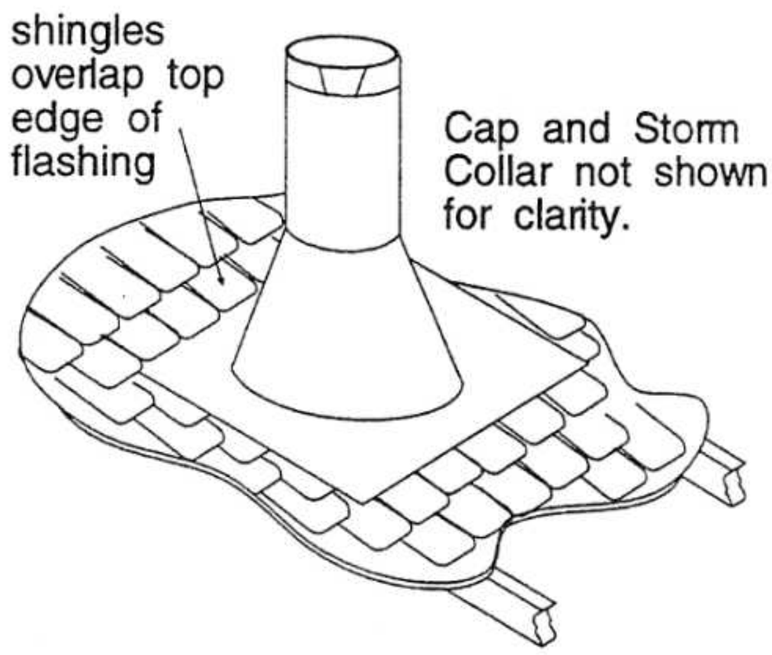

7) Continue to add pipe sections until the height of the Vent Cap meets the minimum building code requirements described in Fig. 10 and the Roof Pitch/Vent Height table below. Note that for steep roof pitches, the vent height must be increased. A poor draft, or down drafting, can result from high wind conditions, nearby trees, adjoining roof lines, these cases, increasing the vent height may resolve the problem.
8) Twist lock the Vent Cap.

NOTES:

a) For multistorey vertical installations, a Ceiling Fire stop (Part# 946-552, Dura-Vent #963) is required at the second floor, and any subse quent floor. Fig. 11. The opening should be framed to 10 " x 10" inside dimensions, in the same manner as shown in Fig. 8.

b) Any occupied areas above the first floor, including closets and storage spaces, which the vertical vent passes through, must be enclosed.

Roof Pitch	Minimum Vent Height	
	Feet	Meters
flat to 7/12	1	0.30
over 7/12 to 8/12	1.5	0.46
over 8/12 to 9/12	2	0.61
over 9/12 to 10/12	2.5	0.76
over 10/12 to 11/12	3.25	0.99
over 11/12 to 12/12	4	1.22
over 12/12 to 14/12	5	1.52
over 14/12 to 16/12	6	1.83
over 16/12 to 18/12	7	2.13
over 18/12 to 20/12	7.5	2.29
over 20/12 to 21/12	8	2.44

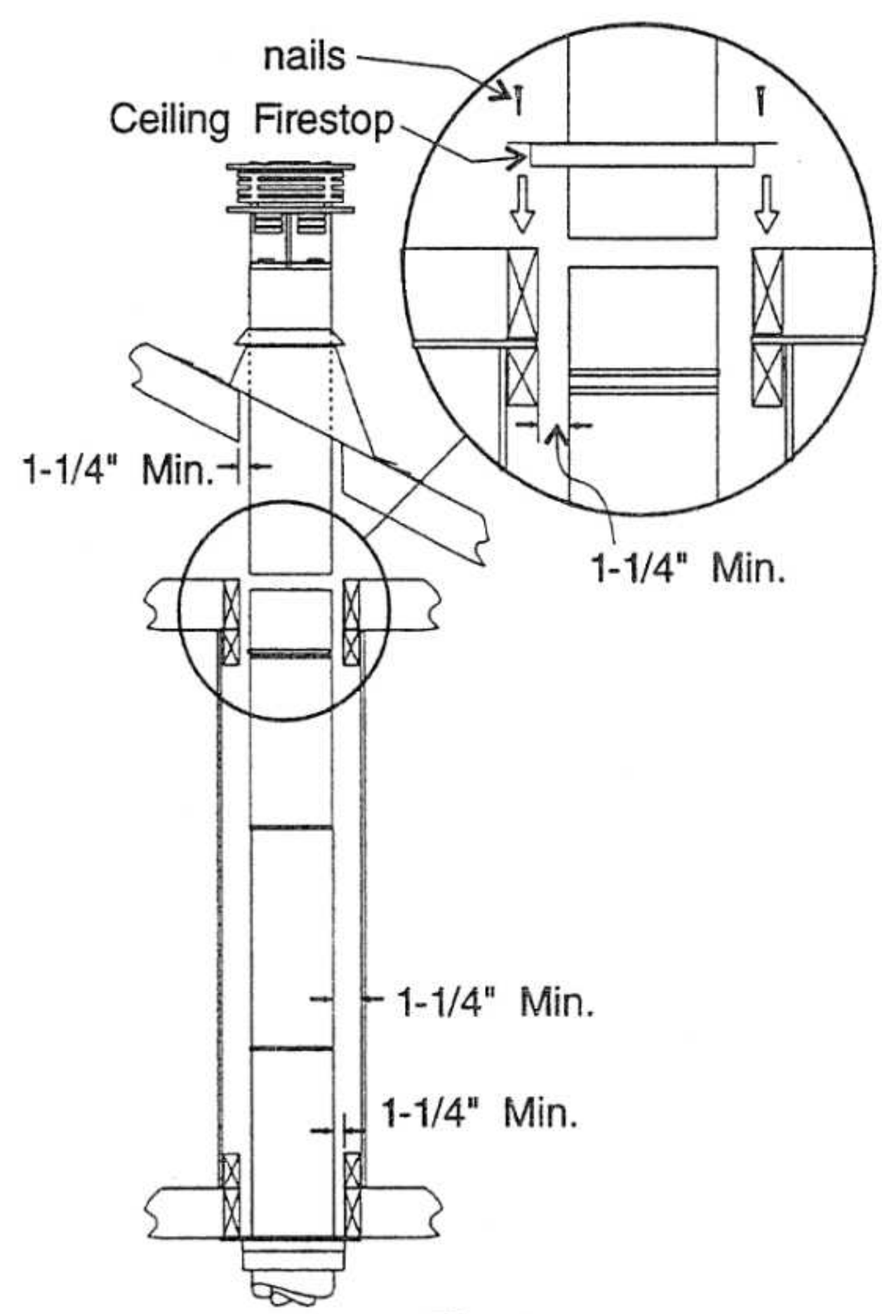

Fig. 11

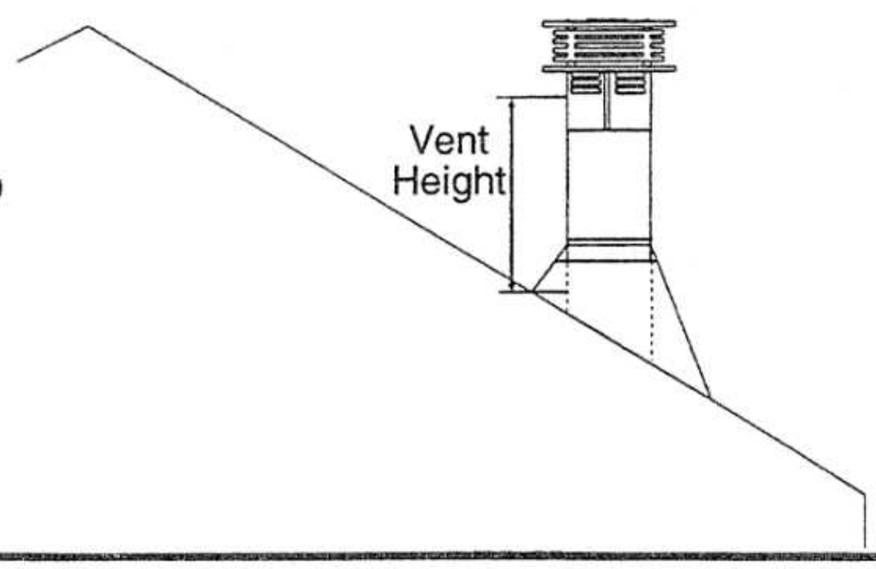

Fig. 10

CATHEDRAL CEILINGS

ROUND SUPPORT (RDS) & SQUARE SUPPORT (SQS)

If your home has a cathedral ceiling (no attic space between the ceiling and the roof), install the chimney and support as follows.

1. Situate the chimney in a convenient location as near as posible to the appliance outlet. Cut and frame a hole in the roof for the support. The sides of this hole must be vertical (see page 3 for hole size).

2. Place the support in the opening. Lower it to the correct height as determined by the table and diagram below.

   Using a level, make sure the support is vertical. If the support extends above the roof, cut it flush with the top of the roof. Nail the support to the frame opening using (8) 3" spiral nails or #8 x 1-1/2" screws. Note: If you are using a 6" square support you may find it difficult to screw it in place because it is fairly small inside. We have provided angle brackets with this support which can be screwed to the outside of the support box and nailed to surrounding framing as required. Use a minimum of four #8 x 1/2" screws per bracket. In some cases these brackets may need to be trimmed (e.g.: to fit under a flashing). Place the Finish Collar around the support and fasten it to the ceiling using the screws provided.

Slope	"X"
0/12 - 2/12	4"
2/12 - 7/12	5 1/2"
7/12 - 12/12	6 3/4"
12/12 - 24/12	7 1/2"
24/12+	12 1/2"

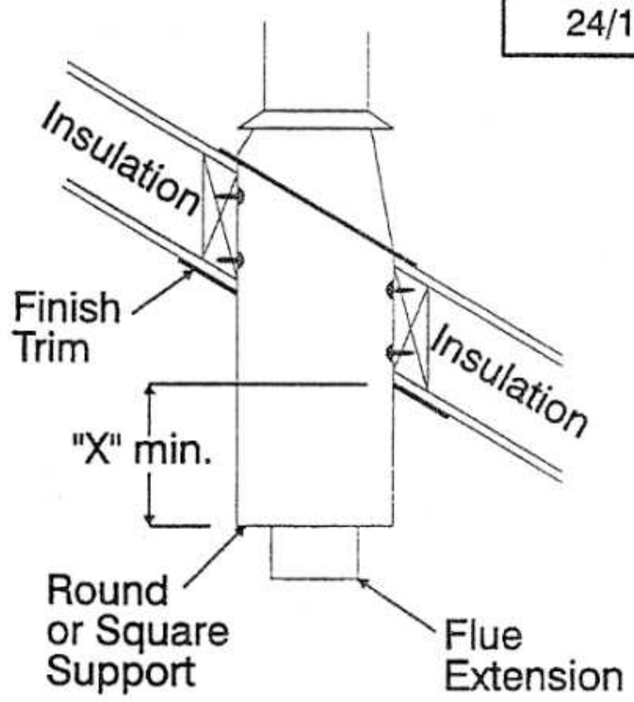

3. Attach the flue extension (found in the support box) to the bottom of the first chimney length using the 3 metal screws provided. Put this chimney length in the support. Push down firmly in place.

4. Use a regular roof flashing. Put the roof flashing in place. Place the flashing under the upper shingles and on top of the lower shin gles-approximately half of the flashing should be under the shingles. Seal the joint between the roof and the flashing with roofing tar or silicone. Nail the flashing to the roof using roofing nails. Place the storm collar over the chimney and flashing. Caulk the joint between the chimney and collar with silicone caulking.

5. Put the remaining required lengths of chimney in place. Fasten the lengths together using three metal screws at each joint (provided with the chimney). If the chimney extends more than 5 feet above the roof, install a roof brace.

6. Fit the rain cap to the top of the chimney. Screw the two metal screws provided through the straps and into the top chimney length.

SUPPORT EXTENSIONS - ROUND (RDSE) OR SQUARE (SQSE)

Steep pitched cathedral ceilings may require the use of a support extension. This piece fits down inside the support and can be adjusted to increase the support's length by up to 22". The extension is attached to the support using the eight metal screws provided. Be sure there is at lease a 2 inch overlap where the extension joins the support.

GAS CONNECTION

The gas connection is a 3/8" SAE 90° flare elbow fitting and is accessible by either going through the back of the pedestal or removing the control panel on the front of the pedestal (see page 30,steps 1-4). The gas line can be rigid pipe or to make installation easier, use a listed flexible connector and manual shut-off valve if allowed by local building codes. For minimum and maximum supply pressure see the System Data table below.

NOTE: During any pressure testing of the gas supply piping system that exceeds test pressures of 1/2 psig, this appliance and its individual shut-off valve must be disconnected from the piping system. If test pressures equal to or less than 1/2 psig are used then this appliance must be isolated from the piping system by closing its individual manual shut-off valve during the testing.

A 1/8" NPT plugged tapping is provided on the gas control valve. It is located near the outlet to the Main burner immediately upstream of the gas supply connection to the appliance, and is easily accessible for a test gauge connection.

Recommended Gas Pipe Diameter				
Pipe Length (feet)	Schedule 40 pipe Inside Dia.		Tubing, Type L Outside Dia.	
	N.G.	L.P.	N.G.	L.P.
0 - 10	1/2" 1.3 cm	3/8" 1.0 cm	1/2" 1.3 cm	3/8" 1.0 cm
10 - 40	1/2" 1.3 cm	1/2" 1.3 cm	5/8" 1.6 cm	1/2" 1.3 cm
40 - 100	1/2" 1.3 cm	1/2" 1.3 cm	3/4" 1.6 cm	1/2" 1.3 cm
100 - 150	3/4" 2.0 cm	1/2" 1.3 cm	7/8" 2.3 cm	3/4" 2.0 cm

NOTE: Some areas allow copper tubing or galvanized pipe - check local codes. **Never** use plastic pipe.

SYSTEM DATA

For 0 to 2000 feet altitude*
Burner Inlet Orifice Sizes:

	Natural Gas	Propane
Rear Burner	#42	#55
Front Burner	#49	#57

*Above 2000 ft.see National Fuel Code Orifice Chart.

Input Rating - Natural Gas 38,000 btu/h
- Propane 33,000 btu/h

Min. Output Capacity with blower Off*

Natural Gas	28,120 btu/hr
Propane	24,090 btu/hr

Max. Output Capacity with blower On*

Natural Gas	29,640 btu/hr
Propane	24,915 btu/hr

*See page 10 for manufactured home chart.

Supply Pressure	Natural Gas	min. 5.0" w.c.
		max. 8.0" w.c.
	Propane	min. 10.5" w.c.
		max. 13.0" w.c.

Manifold Pressure

Natural Gas	3.5"	+/- 0.2" w.c.
Propane	10"	+/- 0.2" w.c.

HIGH ELEVATION

This unit is approved in Canada for altitude 0 to 2000 ft. (CAN1 2.17-M90) with the orifice supplied. For installations above 2000 feet, follow current CAN/CGA-B149.1 and B149.2. In USA refer to ANSI Z223.1-1988, Appendix F, for re-sizing orifice.

LOG INSTALLATION

WARNING: Dangerous operating conditions may occur if these logs are not positioned in their approved locations. Read the instructions below carefully and refer to the diagrams. If logs are broken do not use the unit until they are replaced. Broken logs can interfere with the pilot operation and cause an explosion.

The gas log kit contains the following:

a) Front Log - Part # 902-161
b) Rear Log (with knot) - Part # 902-160
c) Small Cross Logs (2) 8" long - Part # 902-162
d) Embers - Part # 650-934
e) Rear log supports (2)

(Part # 650-932 for the set of four logs)

1) **Log Stand Installation**
   a) Loosen the 4 screws in the top of the rear burner.
   b) Slide the two rear log support brackets into position as shown in the diagram.
   c) Push the rear log support brackets tight against the screws and then tighten down the screws.

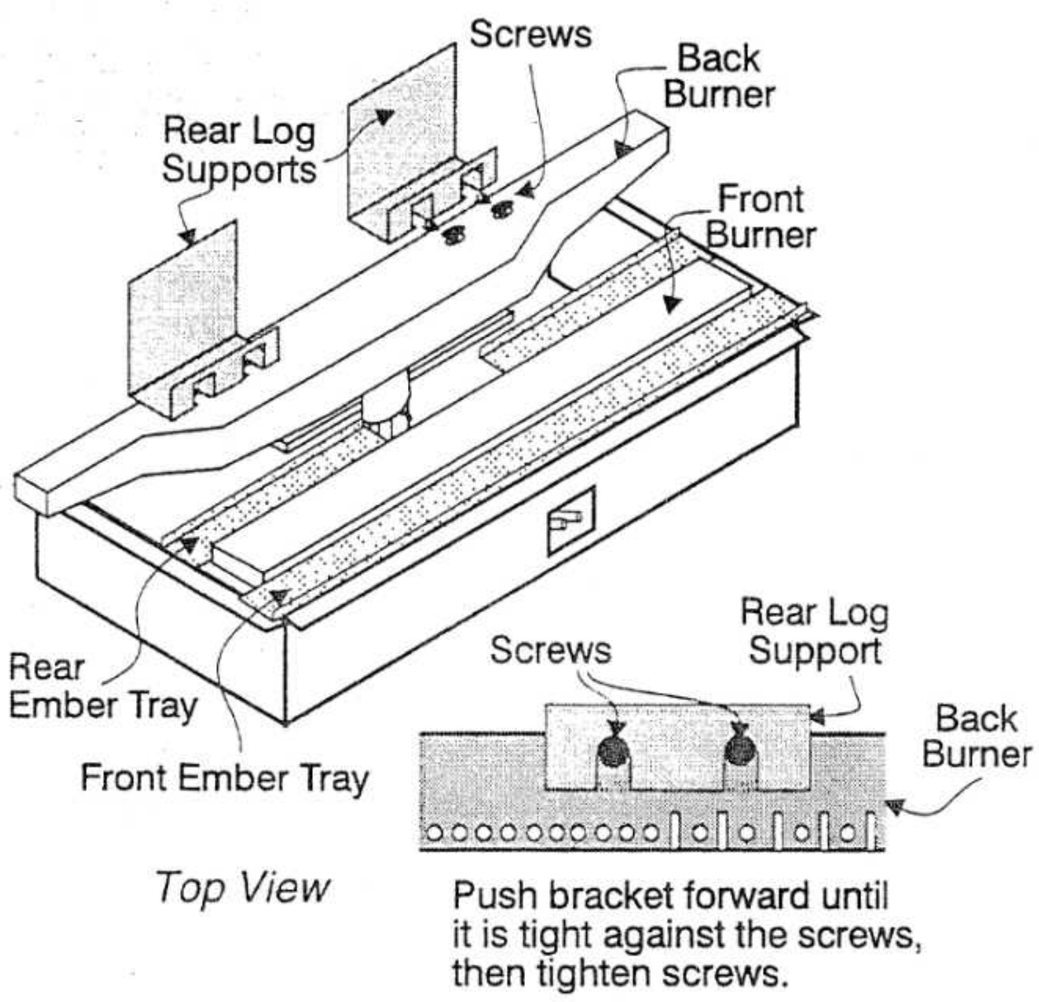

2) Remove the logs from the heater and carefully unwrap them. **The logs are fragile, handle with care - DO NOT FORCE into position.**

3) Place embers along full length of the front burner tray. Put embers on top of the front burner but **keep embers clear of the pilot** and make sure the embers do not prevent the front log from sitting properly on the front log stands. See Fig. 14. **Do not put any embers in the rear ember tray.**

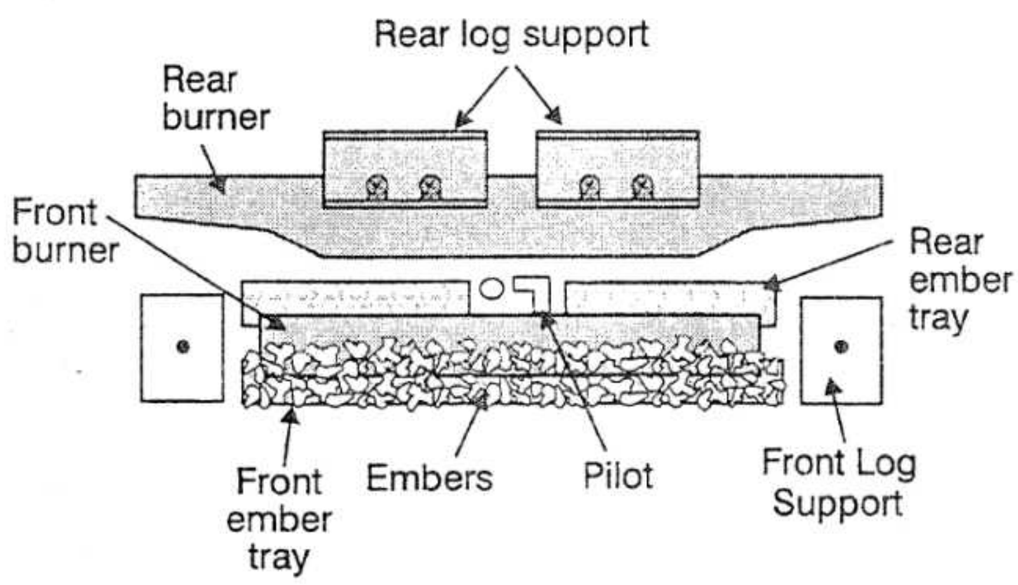

Fig. 14: Top View

4) Take the vermiculite and sprinkle it to cover the bottom of the stove. DO NOT put it on the burner, the ember tray or into the burner tray.

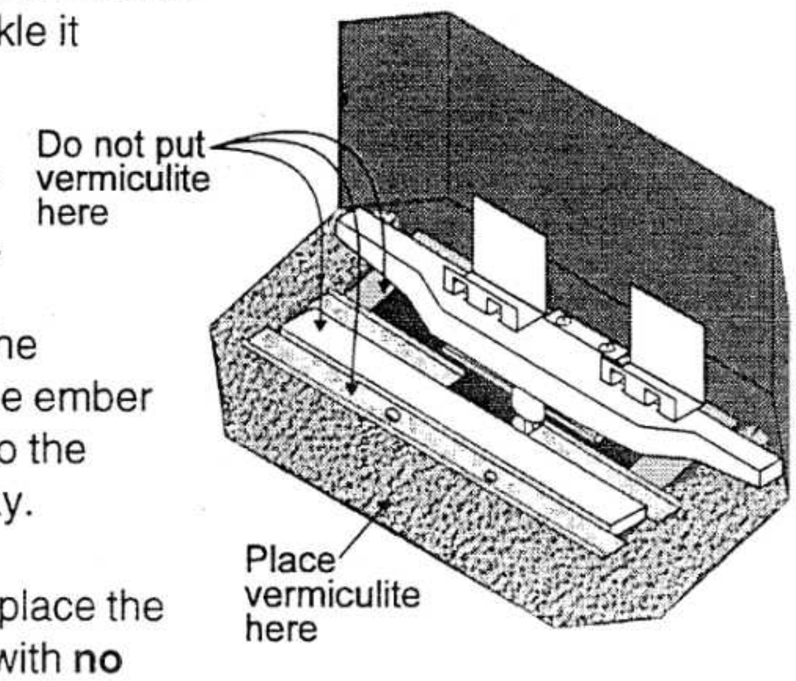

5) Carefully place the rear log (with **no** cutouts) so it rests on the rear supports (with the flat part of the log to the back) and then push the log flush against the back. Center the log, relative to the rear burner. The knot in the log should sit just to the right of center. See Fig. 15 & 16.

6) Place the front log (with the cutouts) on the two front log supports, the log must be even with the front edge of the supports. See Fig.15 & 16.

7) **The cross logs must be positioned on the front and rear logs as shown in Fig 17.**

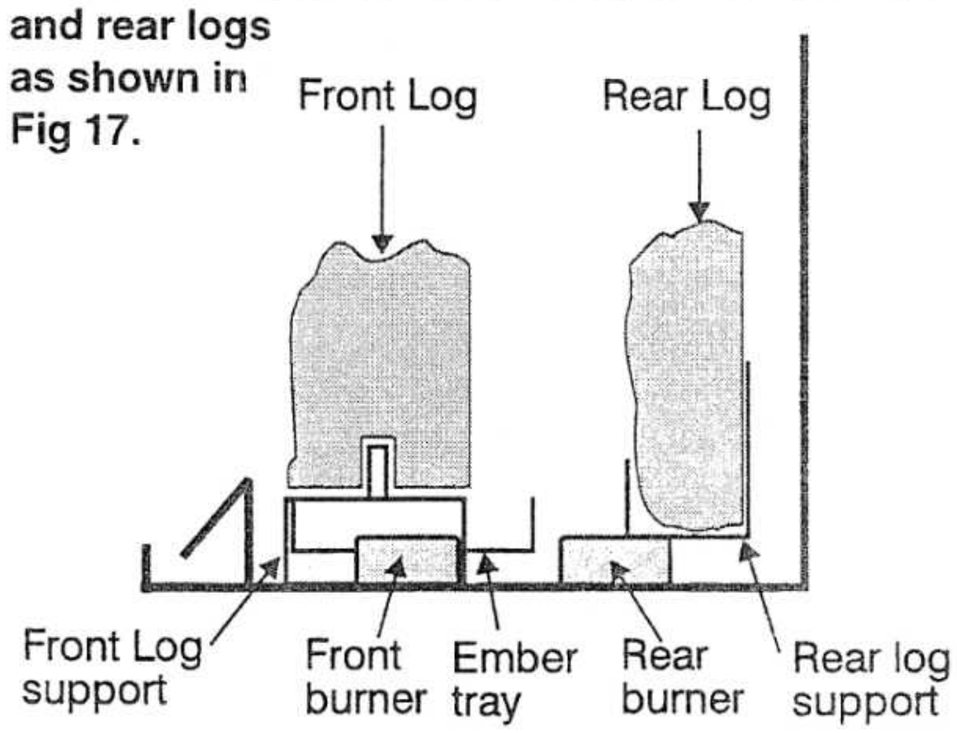

Fig.15: Side View

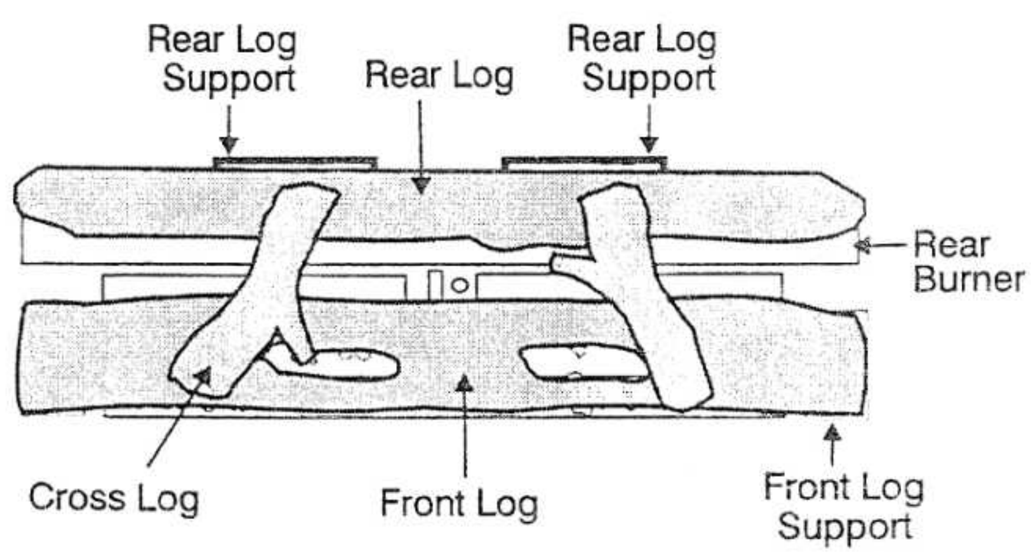

Fig. 16: Top View

7) **The cross logs must be positioned on the front and rear logs as shown in Fig 17.** Incorrectly positioned cross logs will affect the flame pattern and proper operation of the unit. Use the two top holes in the front log for positioning.
The inside edge of the **left** log is even with the left edge of the hole and the "thumb" just touches the front edge of the hole. The inside edge of the **right** log is even with the right edge of the hole and the "thumb" is centered above the knot in the rear log.

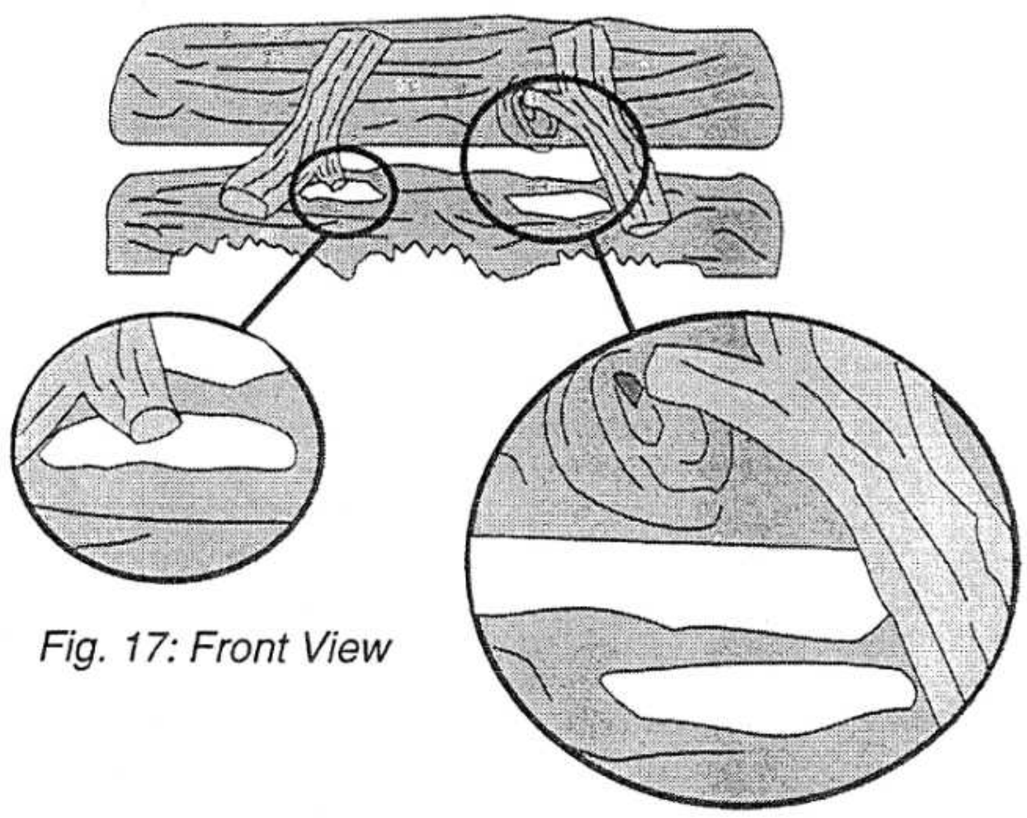

Fig. 17: Front View

DOOR INSTALLATION AND DOOR LATCHES

The door fastens with the four latches, two on each side. The door must be kept closed and locked at all times, except during maintenance. The unit must never be operated without the glass in the door, or with the door open. **Always open the two side panel doors before opening the large center door** to prevent the large door from getting scratched.

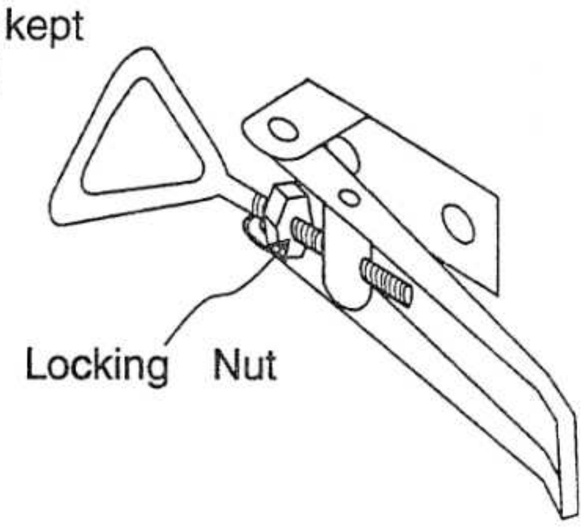

Test the seal around the door by placing a piece of paper between the unit and the door, close the door and try to pull the paper out. If it slips out easily, then the door is not properly sealed. Turn the handle on the adjustable catch to tighten or loosen the latch and then secure with the locking nut.

AERATION ADJUSTMENT

The aeration adjustment rod is attached to the air shutter on the burner. The rod is used to adjust the aeration on the main burner without having to take the appliance apart. This adjustment is performed by the installer and is primarily used in installations at high elevations. Push the rod for a bluer flame, or pull for a more yellow flame.
The burner aeration is factory set but may need adjusting due to either the local gas supply, air supply or altitude. Use caution not to close too much as carbon will be produced.

Natural Gas:	3/8" open (rear) & 1/2" open (front)
Propane:	wide open

The ultimate Direct Vent stove has 2 rods, one for the front burner and one for the rear burner. To make an adjustment follow the instructions below.

CAUTION: the parts mentioned below are very hot!

1) Optional: Remove the bottom louver - you can make the adjustment without removing thislouver but it is easier without the louver. (The louvers have been removed in the diagrams below.
2) With the unit still burning remove the cover plate. (Tip: remove only 1 screw and loosen the other screw until the cover plate swings open.)

3) Use long nose pliers to pull or push the rod(s) as required. Pushing the rod shuts off the flow of air and causes a yellow flame. Pulling the rod will increase the air flow and the flame becomes bluer.

Note: The adjustment rods on the propane and the natural gas are in different locations. See the following diagrams for locations.

NATURAL GAS

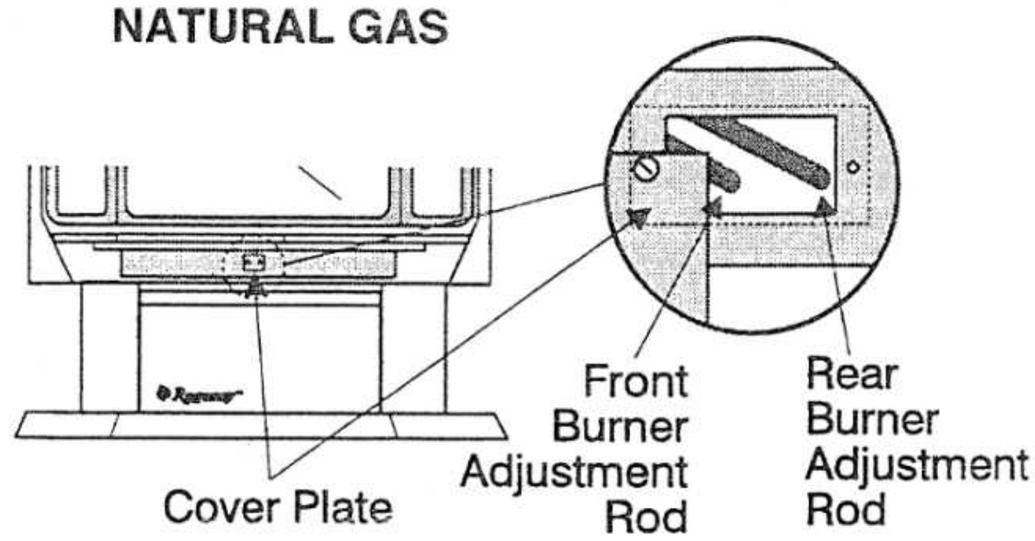

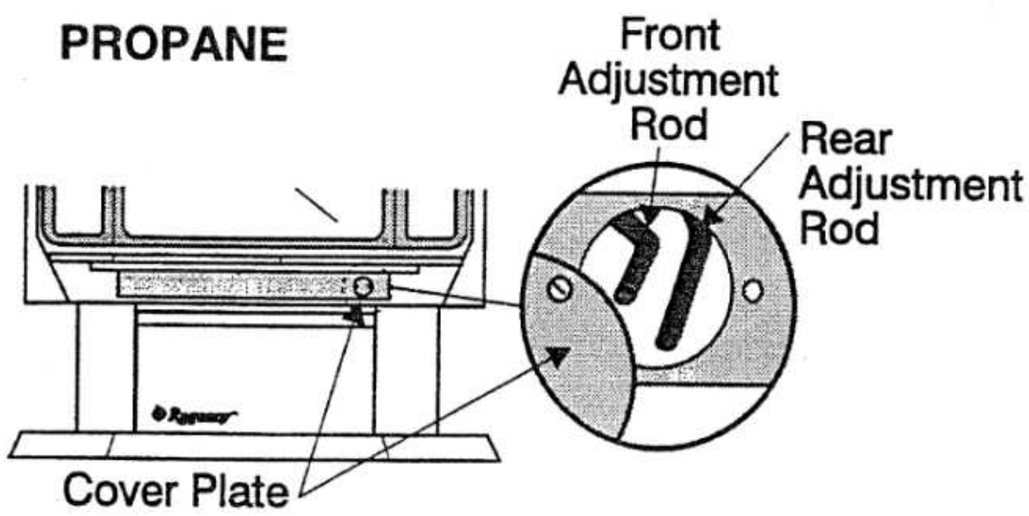

4) Inspect the cover plate gasket. If it is damaged, replace it.
5) Replace the cover plate and screw tightly. To ensure a seal on the screw and screw holes add a dab of silicone to screw.
6) Replace the bottom louver if it was removed.

GAS PRESSURE TEST

The unit is preset to give the correct gas input at the specified manifold pressures shown in the Systems Data table on Page 19. The maximum gas input is 38,000 btu/hr for Natural Gas and 33,000 btu/hr for Propane. The manifold pressure is controlled by a regulator built into the gas control, and should be checked at the pressure test point.

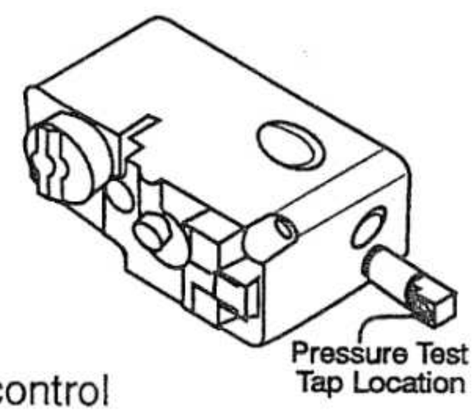

This is a 1/8" NPT plugged tapping located on the gas control valve. The pressure check should be carried out with the unit burning and the setting should be within the limits specified in the System Data table on Page 19. See diagram below for valve location.

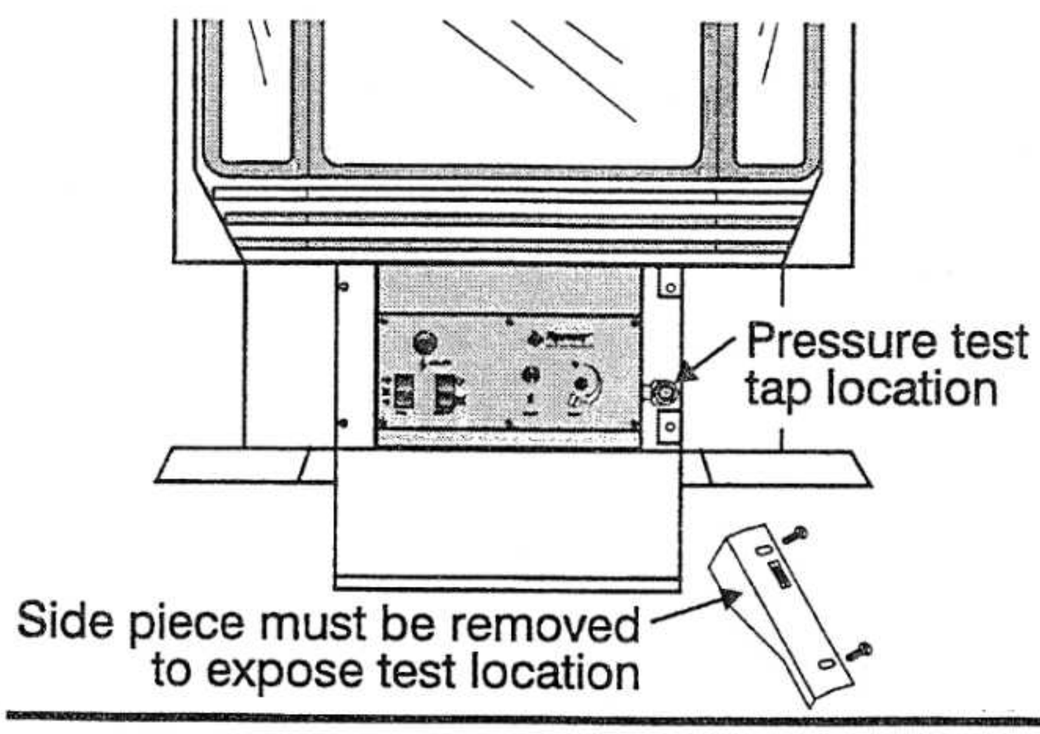

OPTIONAL WALL THERMOSTAT INSTALLATION

A wall thermostat may be installed if desired, follow the wiring table below:

The thermostat is not supplied by Regency, use a CSA, ULC or UL approved millivolt thermostat, 250-750 millivolt rated. A non-anticipator type thermostat is recommended.

Recommended max lead length (two wire) when using wall thermostat (CP-2 system)	
Wire size	Max. length
14 GA.	100 Ft.
16 GA.	64 Ft.
18 GA.	40 Ft.
20 GA.	25 Ft.
22 GA.	18 Ft.

OPTIONAL REMOTE CONTROL INSTALLATION

Use the Regency Remote Control Kit (Part # 910-282) approved for this unit. Use of other systems may void your warranty.

FINAL CHECK

Before leaving this unit with the customer, the installer must ensure that the appliance is firing correctly. This includes:

a) Clocking the appliance to ensure the correct firing rate (rate noted on label)

b) If required, adjusting the primary air to ensure that the flame does not carbon. First allow the unit to burn for 15 min. to stabilize.

CAUTION: Any alteration to the product that causes sooting or carboning that results in damage to the exterior facia is not the responsibility of the manufacturer.

WIRING DIAGRAM

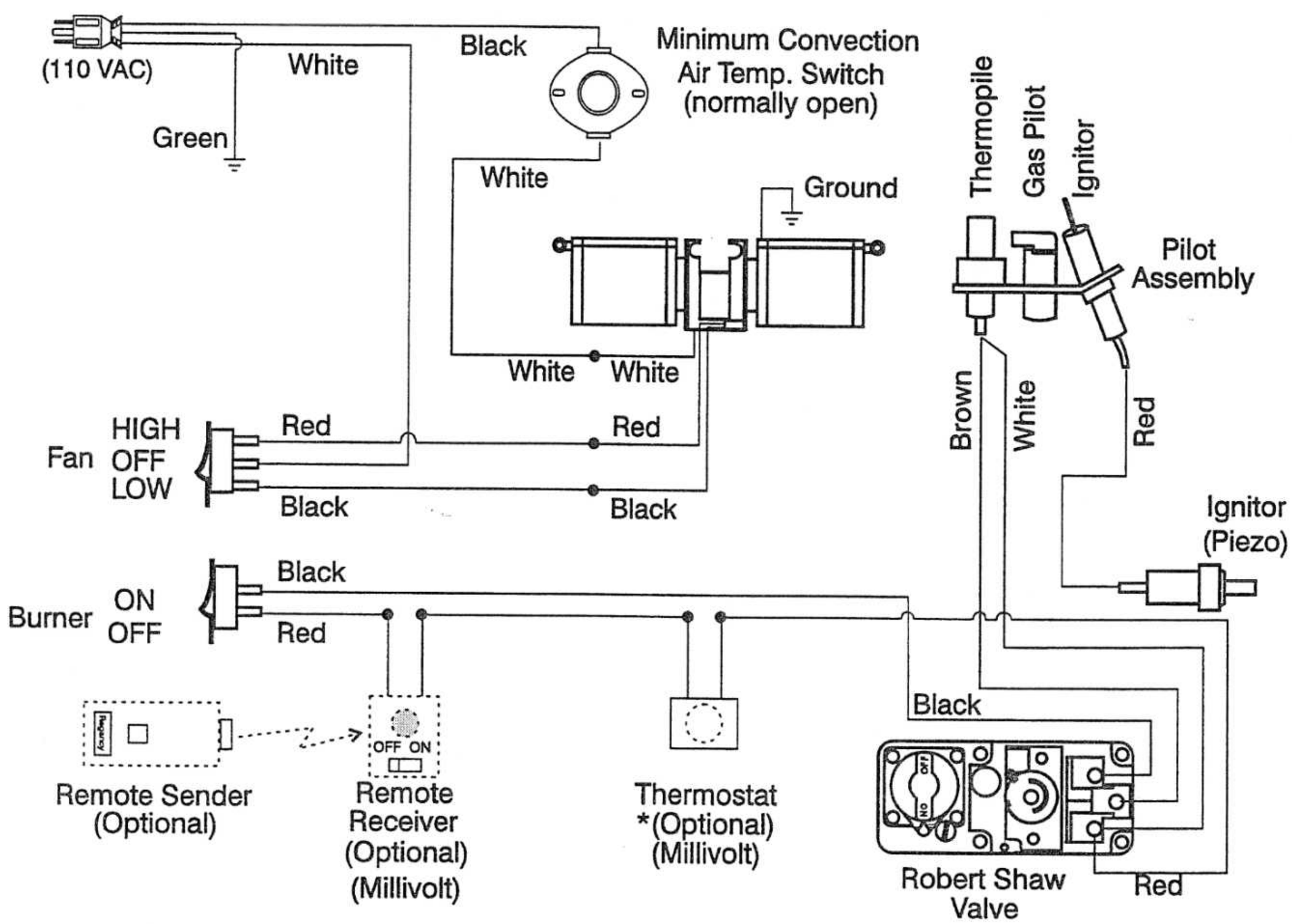

* Not supplied by Regency

OPERATING INSTRUCTIONS

Before operating this appliance, proceed through the following check list.

1) Read and understand these Instructions before operating this appliance.

2) Check to see that all wiring is correct and enclosed to prevent possible shock.

3) Check to ensure there are no gas leaks.

4) Make sure the glass (single wraparound piece or the 3 pc. glass) in the door frame is properly positioned. Never operate the appliance with any of the glass removed or with the door open.

5) Verify that all venting and the cap is unobstructed.

6) Verify log placement. If the pilot cannot be seen when lighting the unit - the logs or the embers have been incorrectly positioned.

7) The unit should never to turned off and on without a minimum of a 60 second wait.

LIGHTING PROCEDURE

IMPORTANT: The PILOT knob cannot be turned from *pilot* to *off* unless it is partially depressed.

1) Open the door of the unit before lighting the pilot. Once the pilot is lit, close the door. You should never operate the unit with the door open.

2) If the PILOT knob is in the ***off*** position proceed to Step 4.

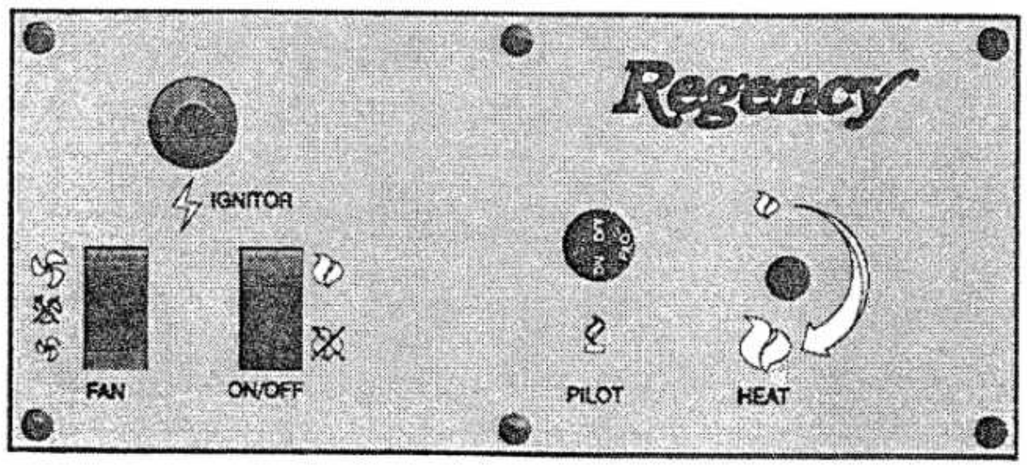

3) Push in PILOT knob slightly and turn clockwise to ***off***. Knob cannot be turned from ***pilot*** to ***off*** unless knob is pushed in slightly. Do not force.

4) Wait five minutes to allow gas, that may have accumulated in the main burner compartment, to escape. If you smell gas, follow the instructions on the front of this manual. If you don't smell gas continue on to the next step.

5) Turn the PILOT knob clockwise to ***pilot***.

6) Push in PILOT knob all the way in and hold. Immediately push red IGNITOR button until pilot lights. Continue to hold the PILOT knob in for approximately one minute, then release the PILOT knob. The pilot flame should continue to burn. If the pilot does not remain lit, repeat operation allowing a longer period before releasing PILOT knob.

7) Turn PILOT knob counter clockwise to ***on***.

8) Use the ON/OFF switch to turn on the burner.

9) Rotate the HEAT control to adjust the flame height ***higher*** or ***lower***.

10) The door of the unit must be closed when in operation.

SHUTDOWN PROCEDURE

1) Use the ON/OFF switch to turn off the burner.

2) Push in the PILOT knob slightly and turn clockwise to ***off***. Do not force.

3) Turn off all electric power to the appliance if service is to be performed.

Copy of the Lighting Plate instructions

FOR YOUR SAFETY READ BEFORE LIGHTING

This appliance must be installed in accordance with local codes, if any; if not, follow the current CAN1-B149/ANSI Z 223.1-1988

WARNING: If you do not follow these instructions exactly, a fire or explosion may result causing property damage, personal injury or loss of life. Improper installation, adjustment, alteration, service or maintenance can cause injury or property damage. Refer to the owner's information manual provided with this appliance. For assistance or additional information consult a qualified installer, service agency or gas supplier.

A) This appliance has a pilot which must be lighted by hand, following the instructions below exactly.

B) BEFORE LIGHTING smell all around the appliance area for gas. Be sure to smell next to the floor because some gas is heavier than air and will settle on the floor.

WHAT TO DO IF YOU SMELL GAS

- Do not try to light any appliance
- Do not touch any electric switch, do not use any phone in your building
- Immediately call your gas supplier from a neighbors phone. Follow the gas supplier's instructions.
- If you cannot reach your gas supplier, call the fire department.

C) Use only your hand to push in or turn the gas control knob. Never use tools. If the knob will not push in or turn by hand, don't try to repair it, call a qualified service technician. Force or attempted repair may result in a fire or explosion.

D) Do not use this appliance if any part has been under water. Immediately call a qualified service technician to inspect the appliance and to replace any part of the control system and any gas control which has been under water.

This appliance needs fresh air for safe operation and must be installed so there are provisions for adequate combustion and ventilation air.

CAUTION: Hot while in operation. Do not touch. Due to high surface temperatures keep children, clothing and furniture, away Keep burner and control compartment clean. See installation and operating instructions accompanying appliance.

LIGHTING INSTRUCTIONS

STOP! Read the safety information above on this label.

1) Push in gas control knob slightly and turn clockwise ⌒ to "OFF". Knob cannot be turned from "PILOT" to "OFF" unless knob is pushed in slightly. Do not force.
2) Wait five (5) minutes to clear out any gas. If you then smell gas STOP! follow "B" in the safety information above on this label. If you don't smell gas, go to the next step.
3) Turn knob on gas control counterclockwise ⌒ to "PILOT".
4) Push in control knob all the way and hold in. Immediately push red button on spark igniter until pilot lights. Continue to hold the control knob in for about 1/2 minute after the pilot is lit. Release knob and it will pop back up. Pilot should remain lit. If it goes out, repeat steps 3) and 4).

If knob does not pop up when released, stop and immediately call your service technician or gas supplier.

If the pilot will not stay lit after several tries, turn the gas control knob to "OFF" and call your service technician or gas supplier.

5) Turn gas control knob counterclockwise ⌒ to "ON".
6) Use rocker switch to operate main burner.

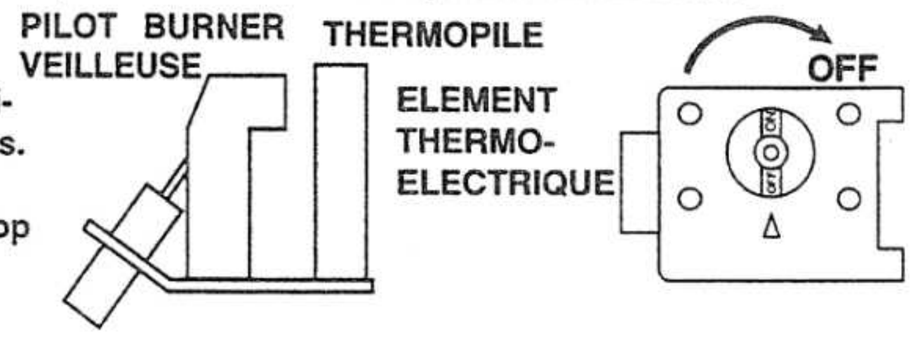

TO TURN OFF GAS APPLIANCE

1) Push in the gas control knob slightly and turn clockwise ⌒ to "OFF". Do not force.
2) Turn off all electric power to the appliance if service is to be performed.

DO NOT REMOVE THIS INSTRUCTION PLATE

908-401

MAINTENANCE

FIRST FIRE

The first fire in your stove is part of the paint curing process. To ensure that the paint is properly cured, light the unit and leave it on for 5 minutes and let it cool down for 30 minutes. Repeat 3 or 4 times. When first operated, the unit will release an odour caused by the curing of the paint, the burning off of any oils remaining from manufacturing and burning off the starch in the gas logs.

The glass panel will require cleaning after the unit has cooled down. **DO NOT ATTEMPT TO CLEAN THE GLASS WHILE IT IS HOT.**

CONVECTION FAN OPERATION

Push the FAN switch to either ***high*** or ***low*** to activate the fan. Depending on the temperature of the unit, the fan may take 5 - 15 minutes to turn on.
Push the FAN switch to the off position to deactivate the fan.
After the stove has been turned off the fan may continue to run. When the stove has cooled down the fan will automatically shut off.

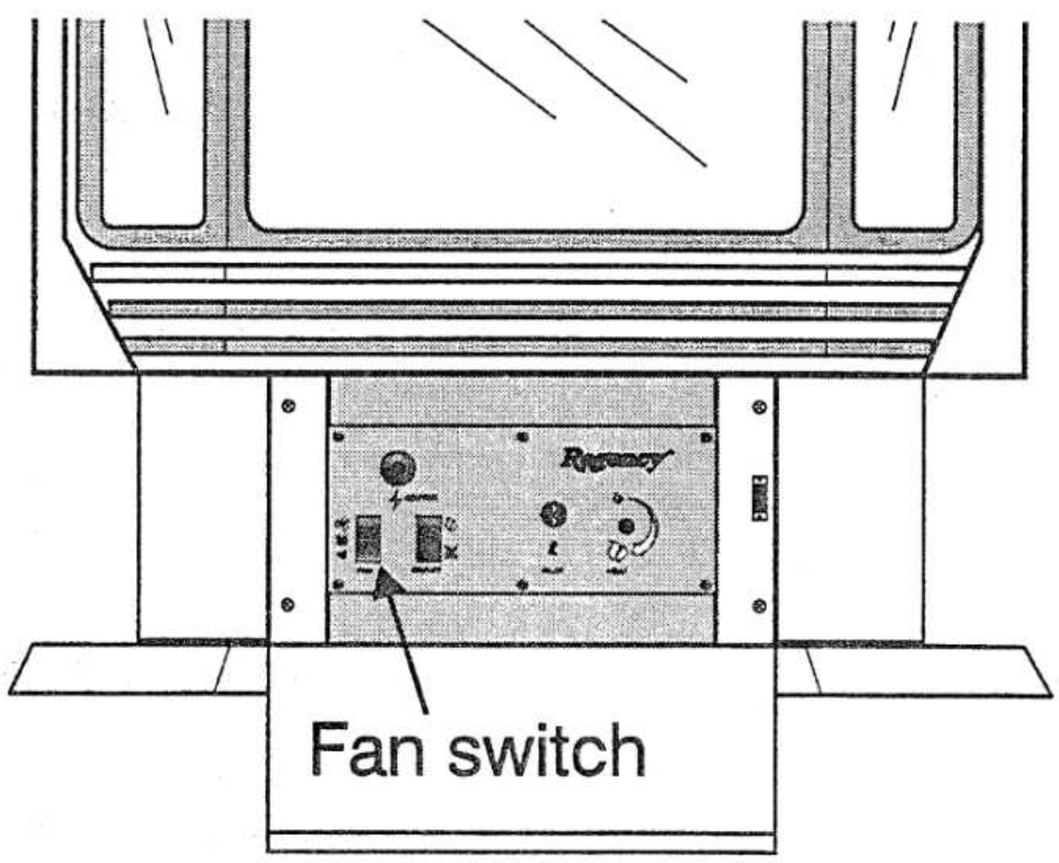

MAINTENANCE INSTRUCTIONS

1) Always turn off the valve before cleaning. For relighting, refer to lighting instructions. Keep the burner and control compartment clean by brushing and vacuuming at least once a year.

   When cleaning the logs, use a soft clean paint brush as the logs are fragile and easily damaged.

2) Clean glass (never when unit is hot), appliance, louvers and door with a damp cloth. Never use an abrasive cleaner. The gold louvers (and optional gold door) may be scratched if abrasives are used to clean them.

   The heater is finished in a heat resistant paint and should only be refinished with heat resistant paint (not with wall paint). Regency uses Stove Brite Paint - Metallic Black #6309.

3) Make a periodic check of burner for proper position and condition. Visually check the flame of the burner periodically, making sure the flames are steady; not lifting or floating. If there is a problem, call a qualified service person.

4) The appliance and venting system must be inspected before use, and at least annually, by a qualified field service person, to ensure that the flow of combustion and ventilation air is not obstructed.

   During the annual service call, the burners should be removed from the burner tray and cleaned. Replace the embers but do not block the pilot.

5) Keep the area near the appliance clear and free from combustible materials, gasoline and other flammable vapours and liquids.

WARNING: CHILDREN AND ADULTS SHOULD BE ALERTED TO THE HAZARDS OF HIGH SURFACE TEMPERATURE AND SHOULD STAY AWAY TO AVOID BURNS OR CLOTHING IGNITION. YOUNG CHILDREN SHOULD BE CAREFULLY SUPERVISED WHEN THEY ARE IN THE SAME ROOM AS THE APPLIANCE.

CAUTION:
ANY SAFETY SCREEN OR GUARD REMOVED FOR SERVICING AN APPLIANCE MUST BE REPLACED PRIOR TO OPERATING THE APPLIANCE.

CLOTHING OR OTHER FLAMMABLE MATERIAL SHOULD NOT BE PLACED ON OR NEAR THE APPLIANCE.

6) Each time the appliance is lit, it may cause condensation and fog the glass. This condensation and fog is normal and will disappear in a few minutes as the glass heats up.

   Never operate the appliance without the glass properly secured in place or with the door open.

7) Periodically check the pilot flames, there should be three strong blue flames approx. 1/2" long - 1 flame to the front burner, 1 to the rear burner and 1 to the thermopile. See diagrams below. If you have an incorrect flame pattern, contact your Regency dealer for further instructions.

Correct pilot flame pattern has three strong blue flames: 1 flowing around the thermopile and igniter electrode, 1 flowing across the rear burner and 1 reaching towards the front burner (it does not have to be touching the burner).

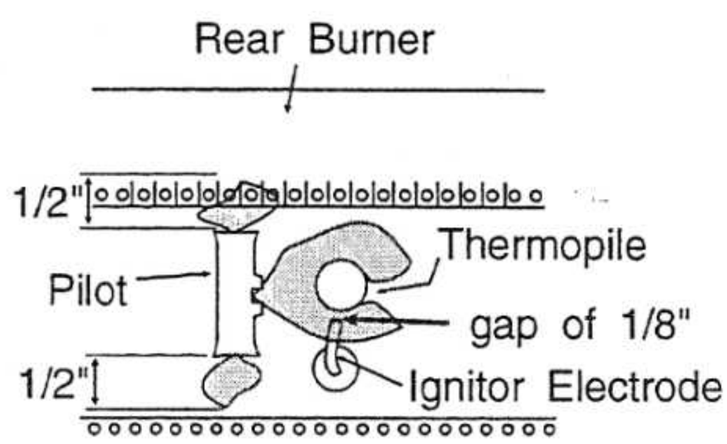

Top View of pilot flame.

Incorrect pilot flame pattern will have small, probably yellow flames, not coming into proper contact with the rear burner or thermopile.

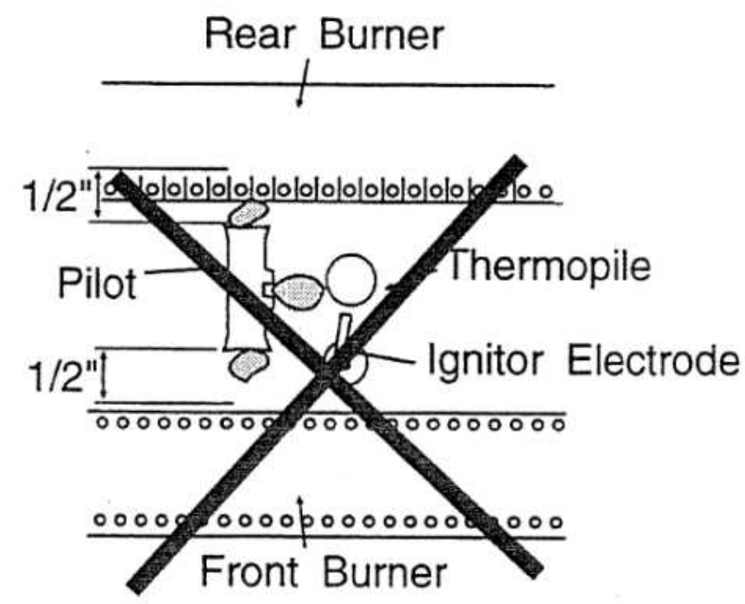

Top View of pilot flame

GENERAL VENT MAINTENANCE

Conduct an inspection of the venting system semiannually. Recommended areas to inspect area as follow:

1) Check areas for the Venting System which are exposed to the elements for corrosion. These will appear as rust spots or streaks, and in extreme cases, holes. These components should be replaced immediately.

2) Remove the Cap, and shine a flashlight down the Vent. Remove any birds nests, or other foreign material.

3) Check for evidences of excessive condensation, such as water droplets forming in the inner liner, and subsequently dripping out the joints, Continuous condensation can cause corrosion of caps, pipe, and fittings. It may be caused by having excessive lateral runs, too many elbows, and exterior portions of the system being exposed to cold weather.

4) Inspect joints, to verify that no pipe sections or fittings have been disturbed, and consequently loosened. Also check mechanical supports such as Wall Straps, or plumbers' tape for rigidity.

MAINTENANCE

LOG REPLACEMENT

The unit should never be used with broken logs. Turn off the gas valve and allow the unit to cool before opening door to carefully remove the logs. The pilot light generates enough heat to burn someone. If for any reason a log should need replacement, you must use the proper replacement log. The position of these logs must be as shown in the diagram under Log Installation.

NOTE: Improper positioning of logs may create carbon build-up and will alter the unit's performance which is not covered under warranty.

GOLD-PLATED DOORS

The 24 carat gold plated finish on the door requires little maintenance, and need only be cleaned with a damp cloth. DO NOT use abrasive materials or chemical cleaners, as they may harm the finish and void the warranty. Clean any fingerprints off before turning the unit on. **If the door starts to discolour, check the gasket seal and replace if necessary.**

DOOR GASKET

If the door gasket requires replacement use 7/8" diameter oval door gasket (Part # 650-920).

LATCH ADJUSTMENT

The door latch may require adjustment as the door gasket material compresses after a few fires and after glass replacement. Turn the handle on the adjustable catch to tighten or loosen the latch and then secure with the locking nut.

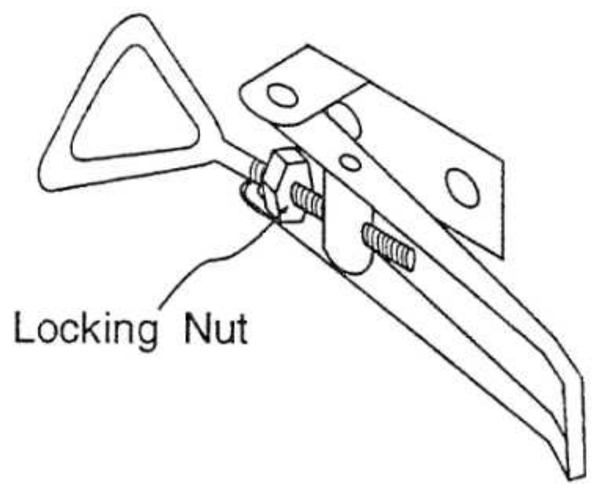

GLASS REPLACEMENT

Your ULTIMATE stove is supplied with high temperature, 5 mm Neoceram ceramic glass that will withstand the highest heat that your unit will produce. In the event that you break your glass by impact, purchase your replacement door from an authorized Regency dealer only, and follow our step-by-step instructions for replacement. The glass is not sold separately, as it must be properly sealed in the door frame.

GLASS DOOR REPLACEMENT

1) Remove door by undoing all 4 latches. **CAUTION: When the latches are undone, support the door to prevent it from dropping down and getting damaged.** Check the gasket around the door and replace if necessary.
2) Replace with a new Regency door and check that the door gasket properly seals the door. If not adjust the door latches or if necessary, replace the door gasket

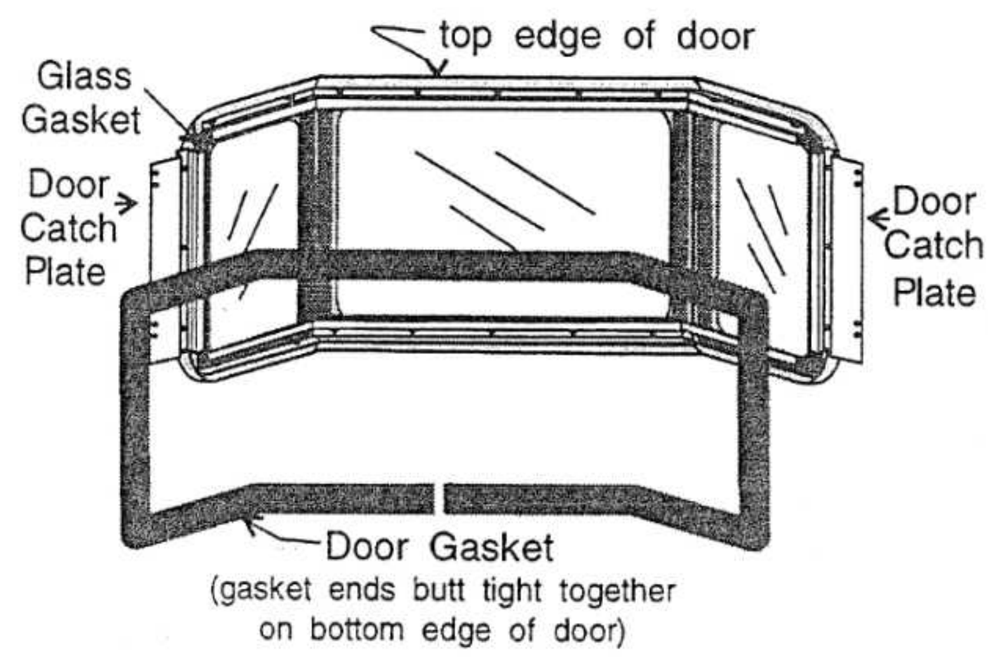

Panel Door with 3 pieces of glass: Part # 620-920

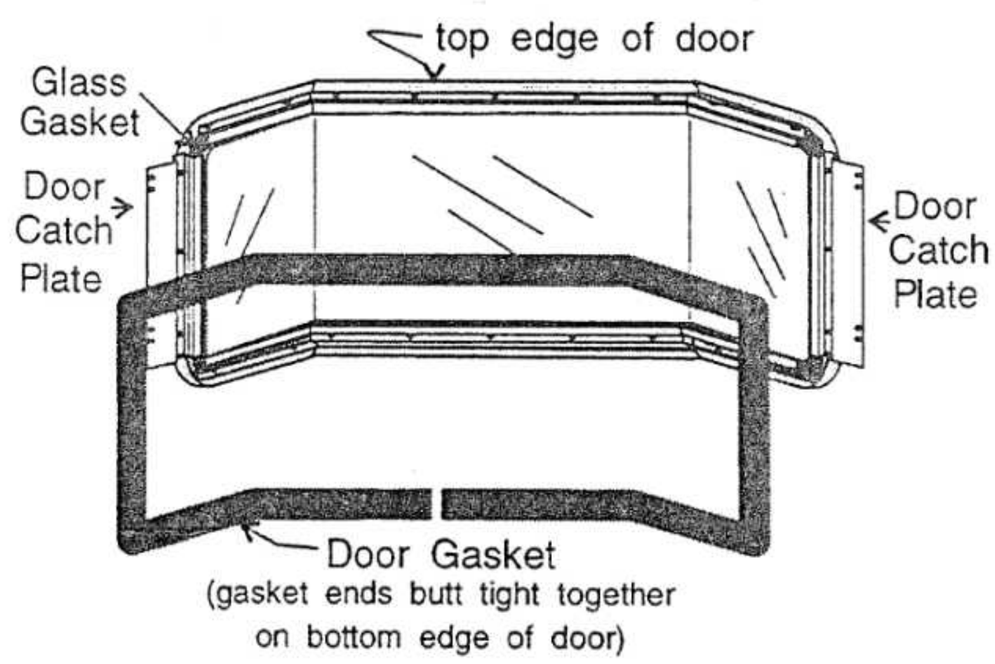

Wraparound Door with 1 piece glass: Part # 620-922

FAN MAINTENANCE

If your fan requires maintenance or replacement, access to the fan is through the plate on the rear wall of the firebox. **NOTE: the unit MUST NOT be operated without the fan access panel securely in place and correctly sealed.**

To remove fan:

1) Unplug or disconnect power source to stove.
2) Remove all logs and the rear log supports, then remove the 12 screws holding the access panel in place.
3) Open the left side door and disconnect the white wire from the thermodisc.
   Note: *If replacing the thermodisc, it must be touching the bottom of the firebox to operate properly.*
4) Remove the green ground wire from the fan bracket.
5) Open pedestal door and remove the six screws holding the control panel on. Disconnect the three wires from the back of the fan switch (marked with a "2")
6) Lift fan off of the 2 pins, tip forward and pull through firebox opening.
7) Disconnect green wire from power cord.

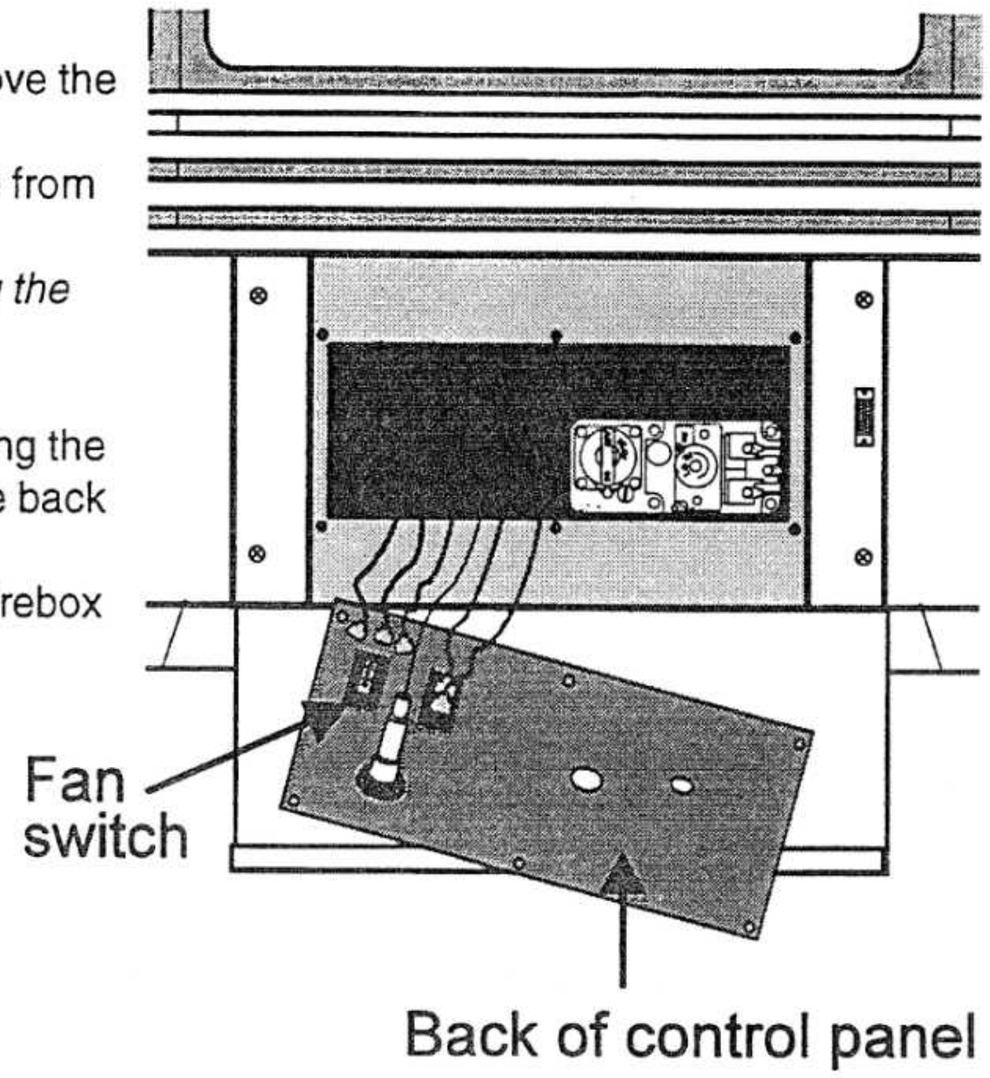

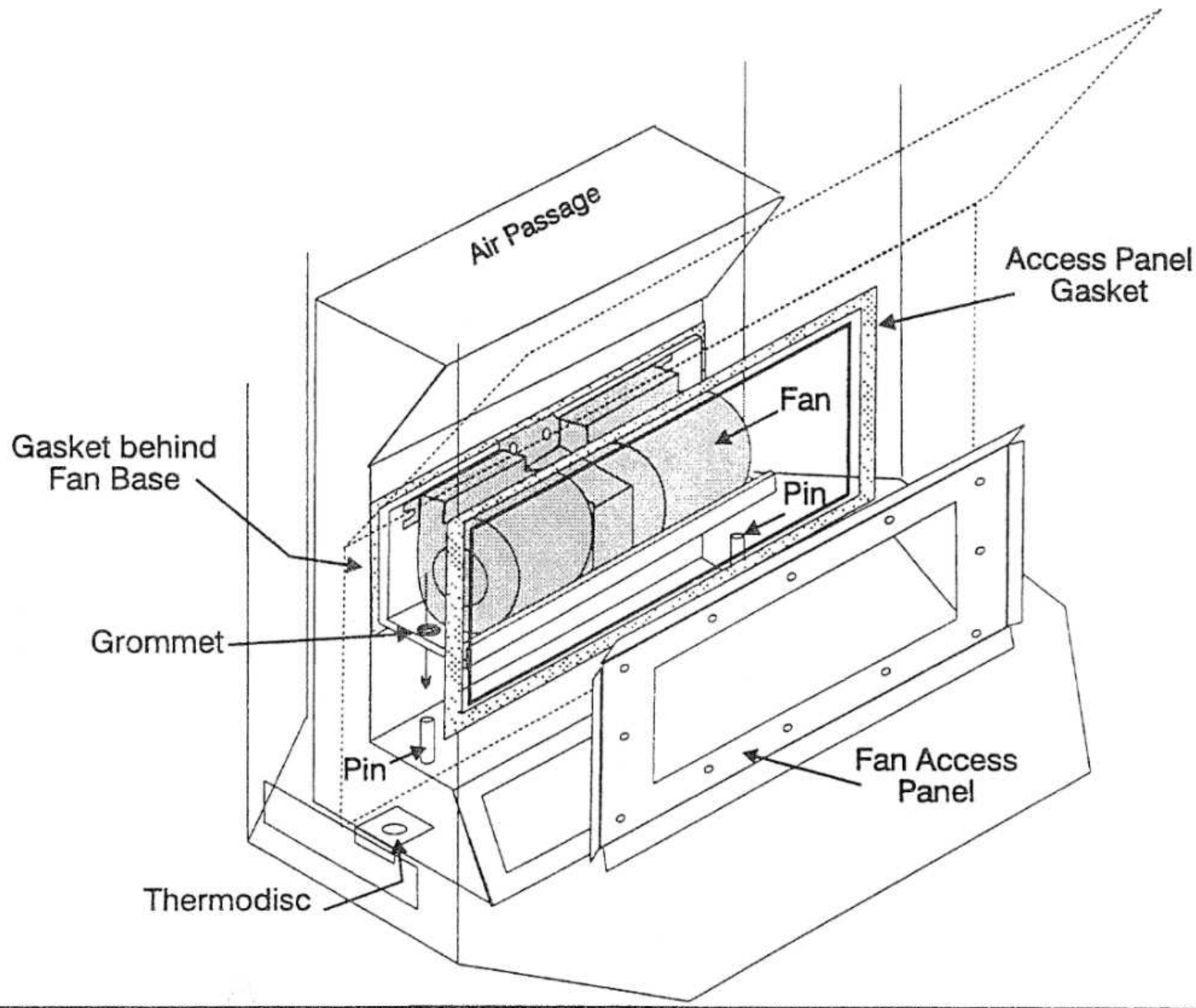

Replacing fan:

Reverse steps (1-7 on removing the fan). Always install a new gasket before replacing the fan access panel (Part# 620-970). Make sure the fan switch wires are reattached in the correct colour sequence. See diagram below. The wires are also marked with a #2.

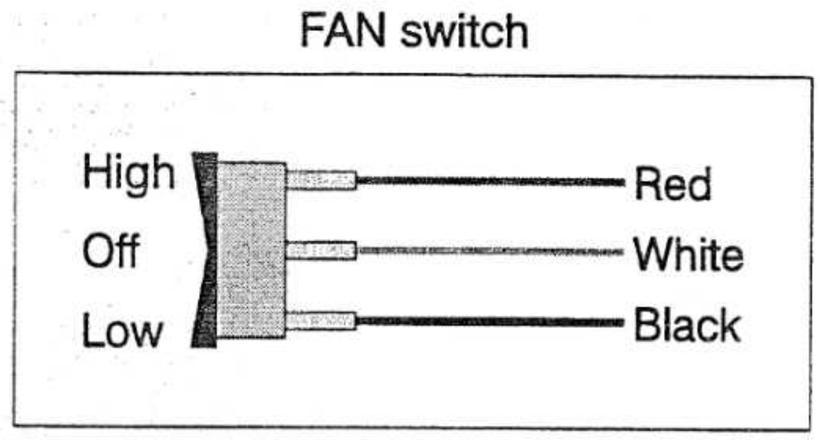

Hint for pushing fan down onto pins - rub a bit of dish soap on the grommet so it will slide more easily onto the pin. Check to make sure the fan is seated properly on the pins - try to move the fan back and forth, there should be no noise, if there is check that the grommets haven't come loose.

REMOVING VALVE

If your valve requires maintenance or replacement, follow instructions that follow:

1) Open front pedestal door. You may want to put a soft cloth on the base of the unit so that when the pedestal door is open it doesn't scratch the paint. See diagram below.

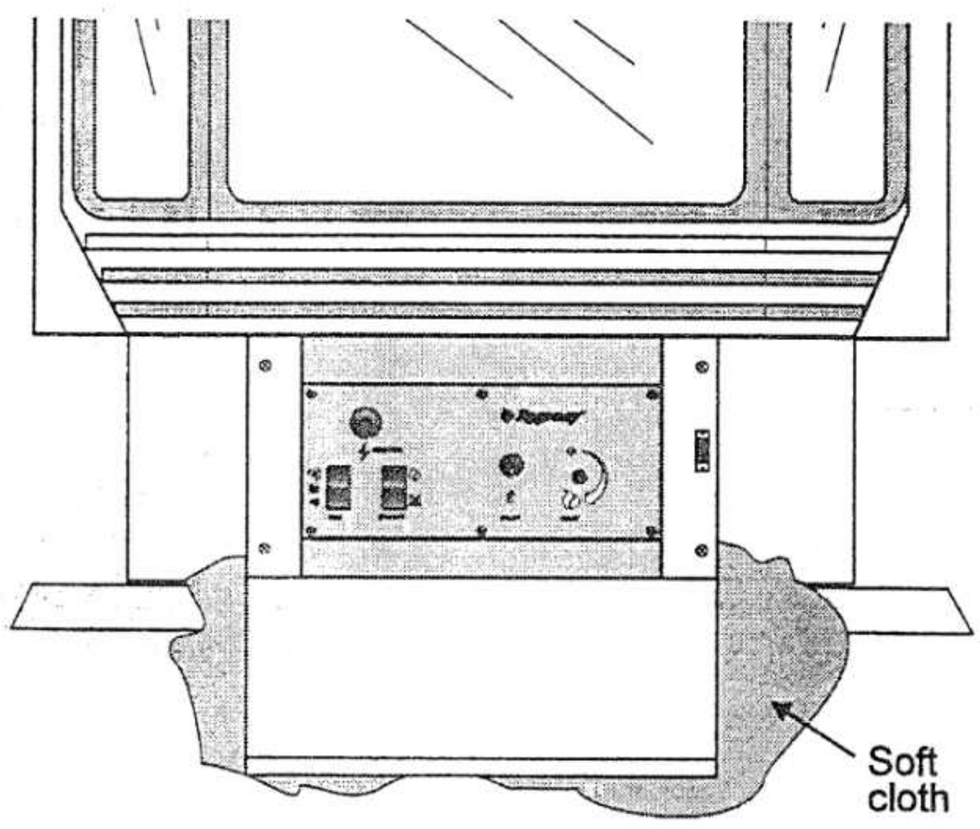

2) Remove "Heat" control knob. It should come off easily by just pulling gently toward you.
3) Remove "Pilot" knob. You must remove the screw in the center of the "Pilot" knob and then pull toward you.

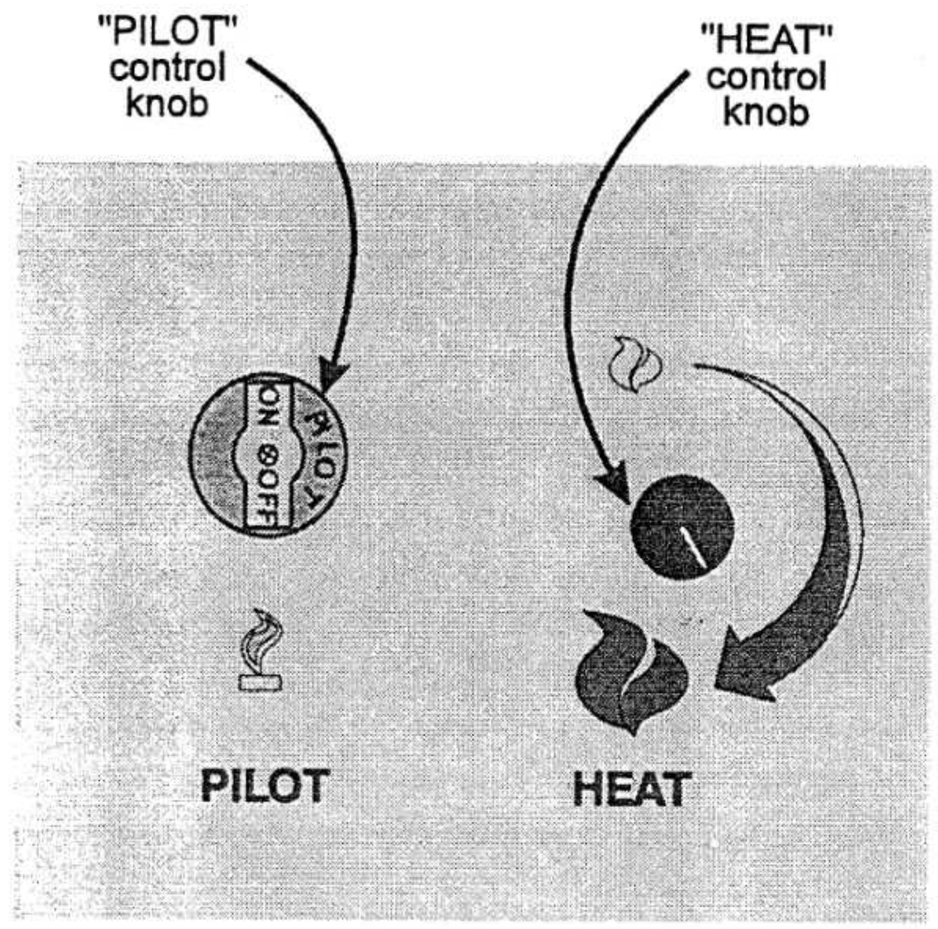

4) Undo the six screws holding the control panel in place.
5) Disconnect all wires from the back of the panel and then remove panel. You should lay the panel on a soft cloth so it doesn't get marked up. See diagram below.

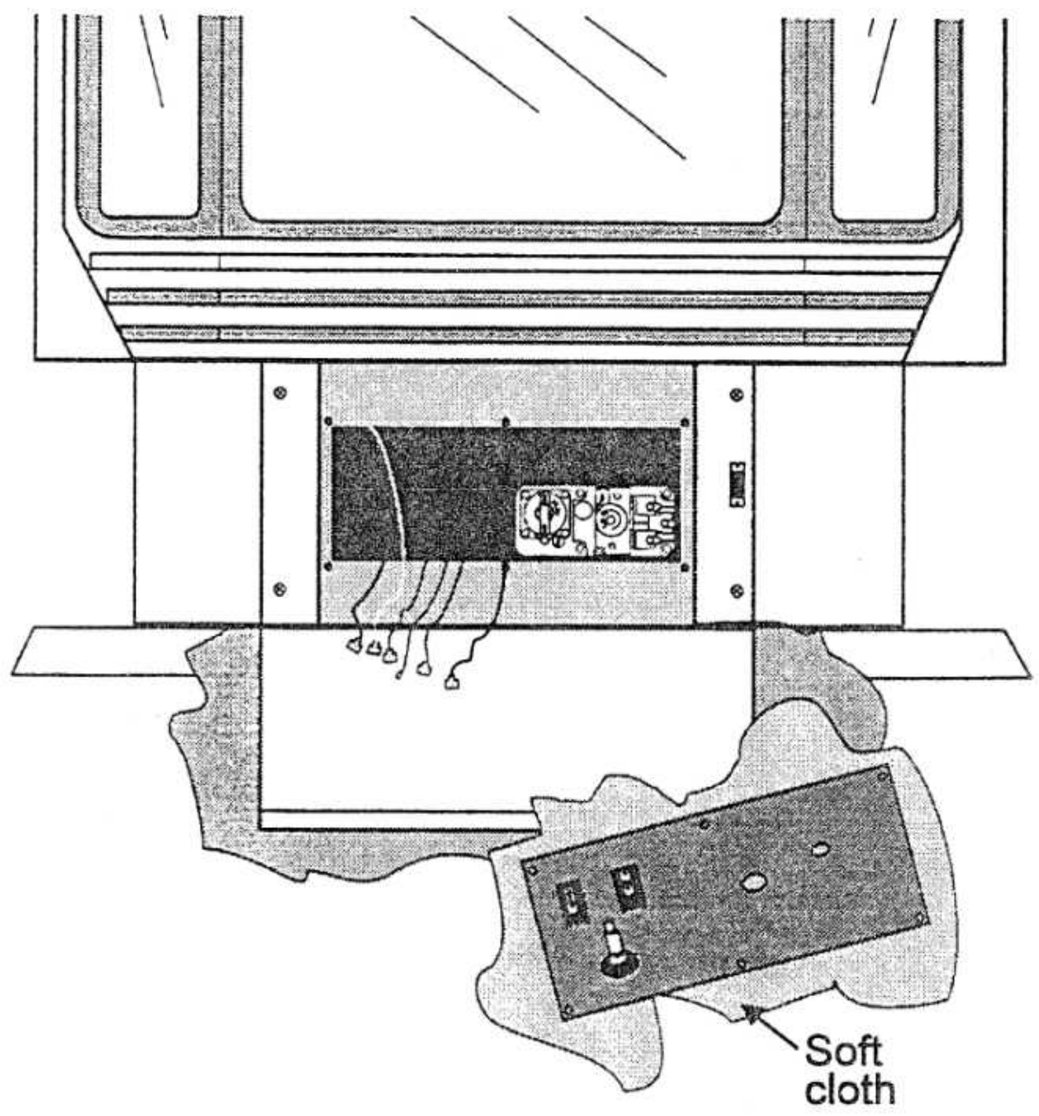

6) Remove the two outside frame pieces by removing two screws per side. See diagram below.

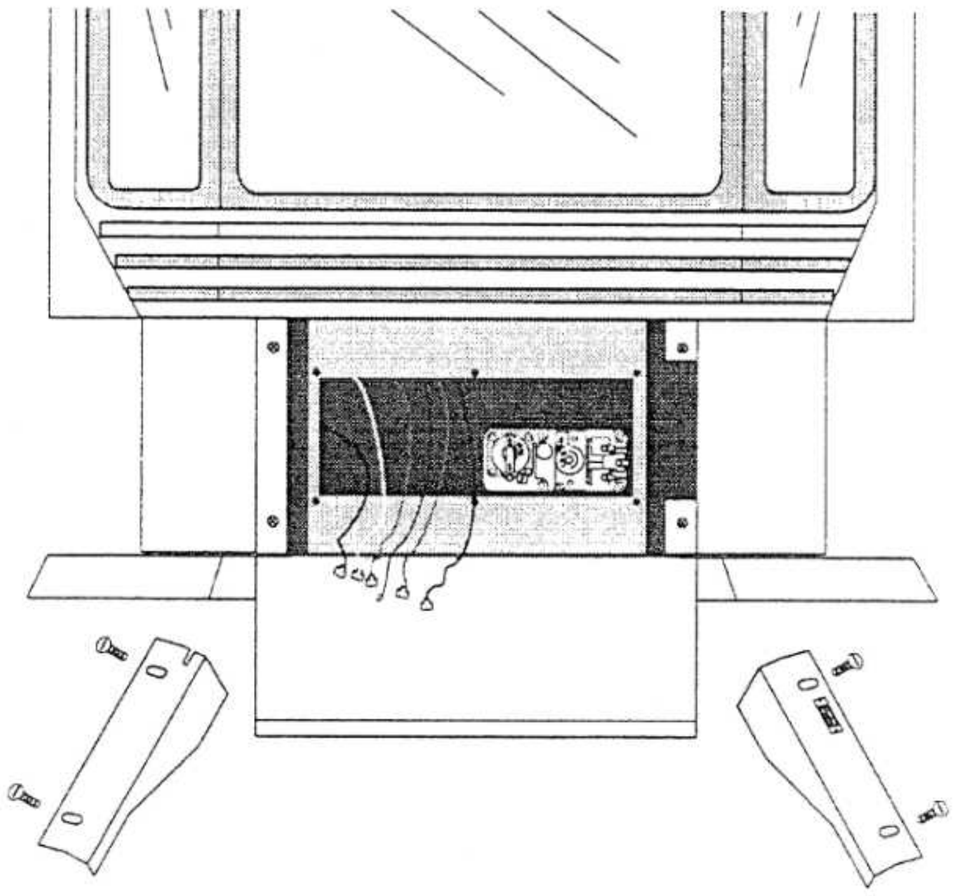

7) At this point you should disconnect the gas at the valve. You can access it through the front now that the control panel is off, or you can access it through the rear pedestal cover plate.
8) Carefully remove the logs.
9) Remove both burners. See diagram below.

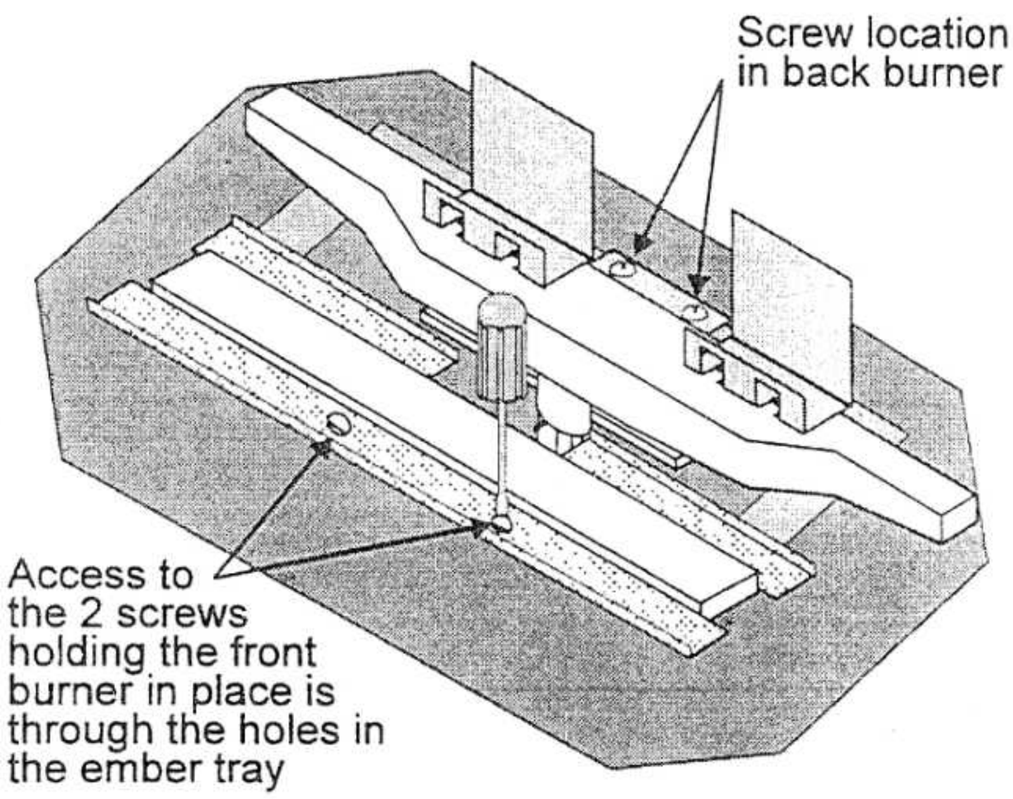

10) Remove all screws holding the burner tray assembly in place.

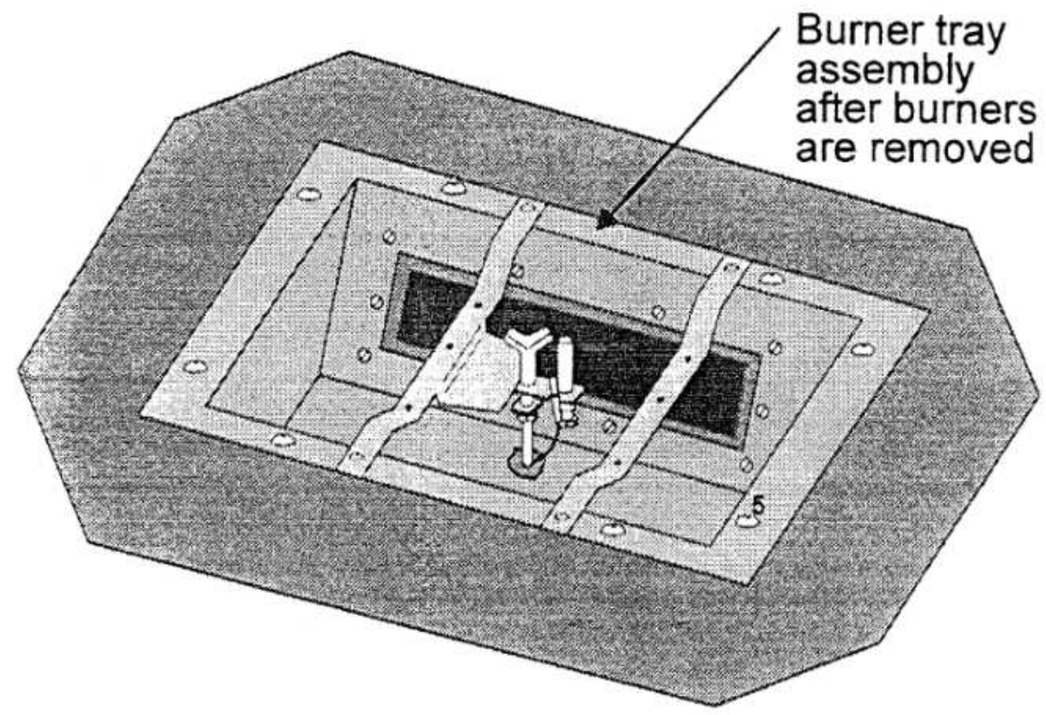

11) Carefully lift the burner tray assembly out. See diagram below.

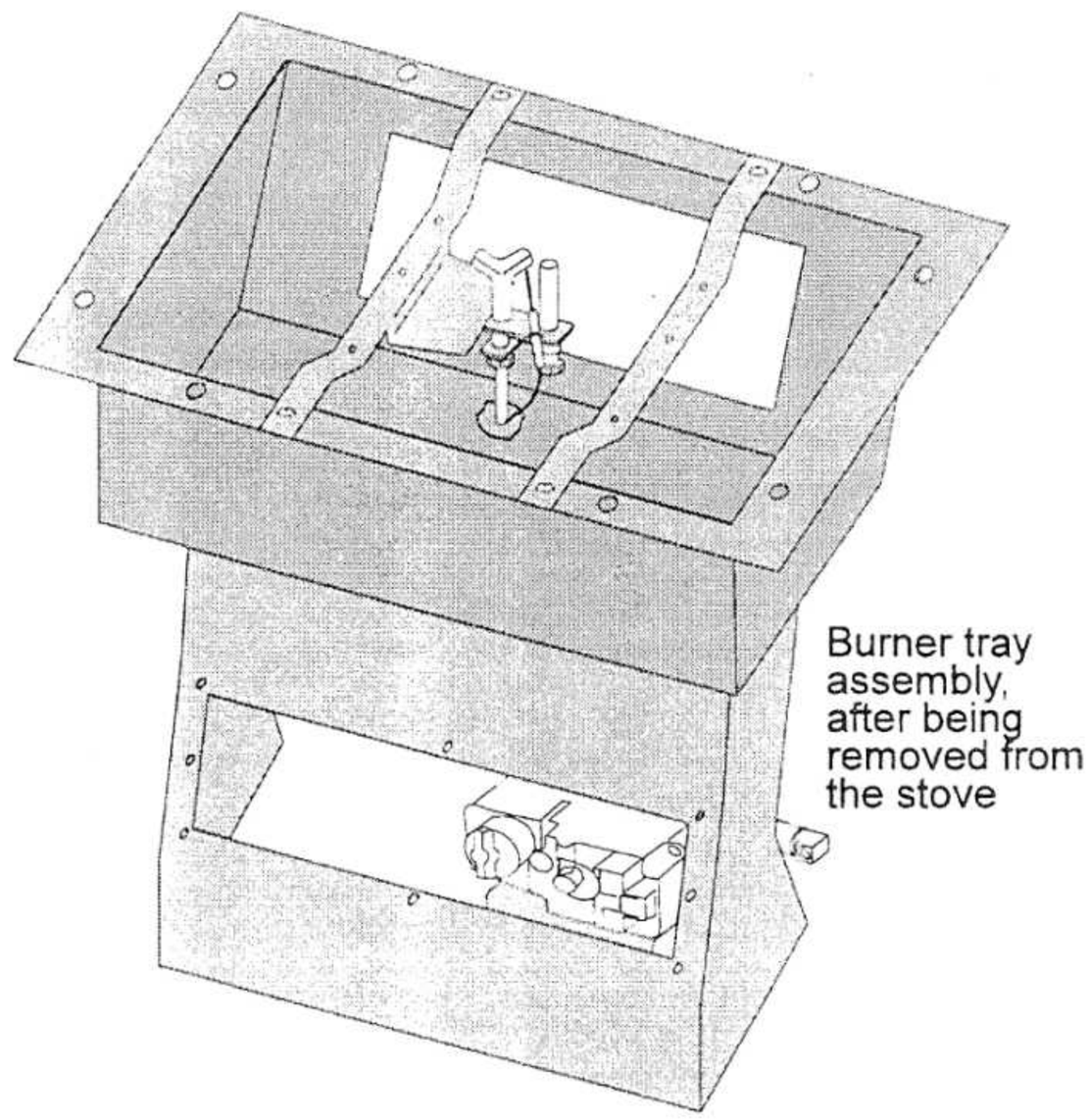

12) To replace the burner tray assembly, simply reverse these instructions. Be sure that the "PILOT" control knob is re-attached in the same position as the "PILOT" control knob that is on the valve.

WARRANTY

Regency Fireplace Products, are designed with reliability and simplicity in mind. In addition, our internal Quality Assurance Team carefully inspects each unit thoroughly before it leaves our door. Regency Industries Ltd. is pleased to extend this limited lifetime warranty to the original purchaser of a Regency Product.

The Warranty: Lifetime
Covered under the agreement are the following components:
Combustion chamber, heat exchanger, burner tubes, logs, embers, glass (thermal breakage) and all gold plating.
The above will be covered for parts and labour for the first five years and parts only thereafter.
Electrical components such as blowers, switches, wiring, thermodiscs, remote control, thermopiles, thermocouples and gas valves are covered for one year from the date of purchase.

Conditions:
All installations must be performed by a qualified gas fitter and installed according to all applicable local and national codes. Also, all service work must be carried out by a qualified gas service person. It is the responsibility of the installer to ensure that the appliance is firing as per rating plate. Any part or parts of this unit which in our judgement show evidence of such defect will be repaired or replaced at Regency's option, through an accredited distributor or agent provided that the defective part be returned to the distributor or agent Transportation Prepaid, if requested.

Exclusions:
This limited Lifetime Warranty does not extend to or include paint, door or glass gasketing or trim. It does not cover installation and operational related problems such as over-firing, downdrafts or spillage caused by environmental conditions, nearby trees, buildings, hilltops, mountains, inadequate venting or ventilation, excessive offsets, negative air pressures caused by insufficient make up air, mechanical systems such as furnaces, fans, clothes dryers etc.
The warranty does not extend to any part or parts which show evidence of misuse or abuse, neglect, accident or lack of maintenance.
Products made by other manufacturers and used in conjunction with the operation of this appliance without authorization from Regency, may nullify your warranty on this product.
Regency Industries Ltd., shall in no event be liable for any special, indirect consequential damages of any nature whatsoever which are in excess of the original purchase price of the product. Any alteration to the unit which causes sooting or carbonning that results in damage to the exterior facia is not the responsibility of Regency Industries Ltd.

Vent Components:
The venting components are under warranty from Simpson DuraVent Inc.

General:
It is essential that all submitted claims provide all of the necessary information including purchase date, serial #, type of unit and part or parts requested.

Please complete the information below for future reference.

DATE PURCHASED _____

MODEL NO. _____ SERIAL NO. _____

DEALERS NAME & ADDRESS _____

_____

_____