Main Assembly

	Part #	Description
1)	940-355/P	Glass (includes glass gasket)
1a)	536-539	Door Frame Assembly no Glass
1b)	536-540	Door Frame Assembly with Glass
	846-697	Glass Gasket Tadpole Tape (12') (936-155)
	904-691	Glass U Clip (each) - 4 per unit
	948-463	Burner Assy - NG/LP
3)	536-092	Log Tray Middle
4)	536-014	Log Tray Rear
5)	536-011	Fan Access Plate
6)	536-107	Gasket - Fan Access Plate
7)	536-517/P	Fan Assembly 120 V
8)	910-215/P	Replacement Fan Motor 120 V
	910-794	Power Cord
	910-985	Wire Harness (Faceplate) - Black
	910-986	Wire Harness (Faceplate) - Red
	910-692	Wire Fan to Power Cord Ground
	910-142	Fan Auto On/Off Thermodisc
	536-522	Baffle Plate Assembly
9)	536-901	Brick Panel Set - Standard Brown
9)	536-902	Brick Panel Set - Standard Red
	511-031	Brick Clip
12)	537-515	Flue Adaptor Assembly
13)	820-389	Thermodisc Bracket
14)	536-091	Pilot Shield
15)	910-038/P	Pilot Assy- 3 Flame - S.I.T. - NG
15)	910-039/P	Pilot Assy - 3 Flame - S.I.T. - LP
	904-430	Orifice #42 - NG
	904-163	Orifice #54 - LP
	936-170	Orifice Gasket
	Part #	**Description**
16)	911-268	Valve only - NG
	911-270	Valve only - LP
17)	537-674/P	Valve Assembly - NG
17)	537-676/P	Valve Assembly - LP
19)	910-073	Battery Holder - DC Sparker
	910-074	DC Sparker - Switch
18)	537-001	Safety Screen Frame
18a)	537-000	Safety Screen Mesh
	537-002	Safety Screen Insert
	911-338/P	Remote Receiver
	910-592	Remote Transmitter Handheld GTMF Silver
	911-175/P	Remote Transmitter Handheld GTMF Black
20)	910-373	Pilot Extension Knob
	910-386	Thermocouple
	910-341	Thermopile
	910-096	Pilot Hood
	910-036	Pilot Orifice NG
	910-037	Pilot Orifice LP
	910-432	Pilot Tube w/nuts
25)	910-581	Stepper Motor NG
25)	910-582	Stepper Motor LP
	536-106	Thermal Insulation
	536-109	Gasket - Valve Tray
	536-930	Complete Log Set
	902-156	Lava/Embers
	946-669	Platinum Bright Embers
	946-708	Embaglow Bright Embers
	537-969	Conversion Kit LP
	537-940	Hearth Trim
	920-066	Manual

* Not available as a replacement part.

Main Assembly

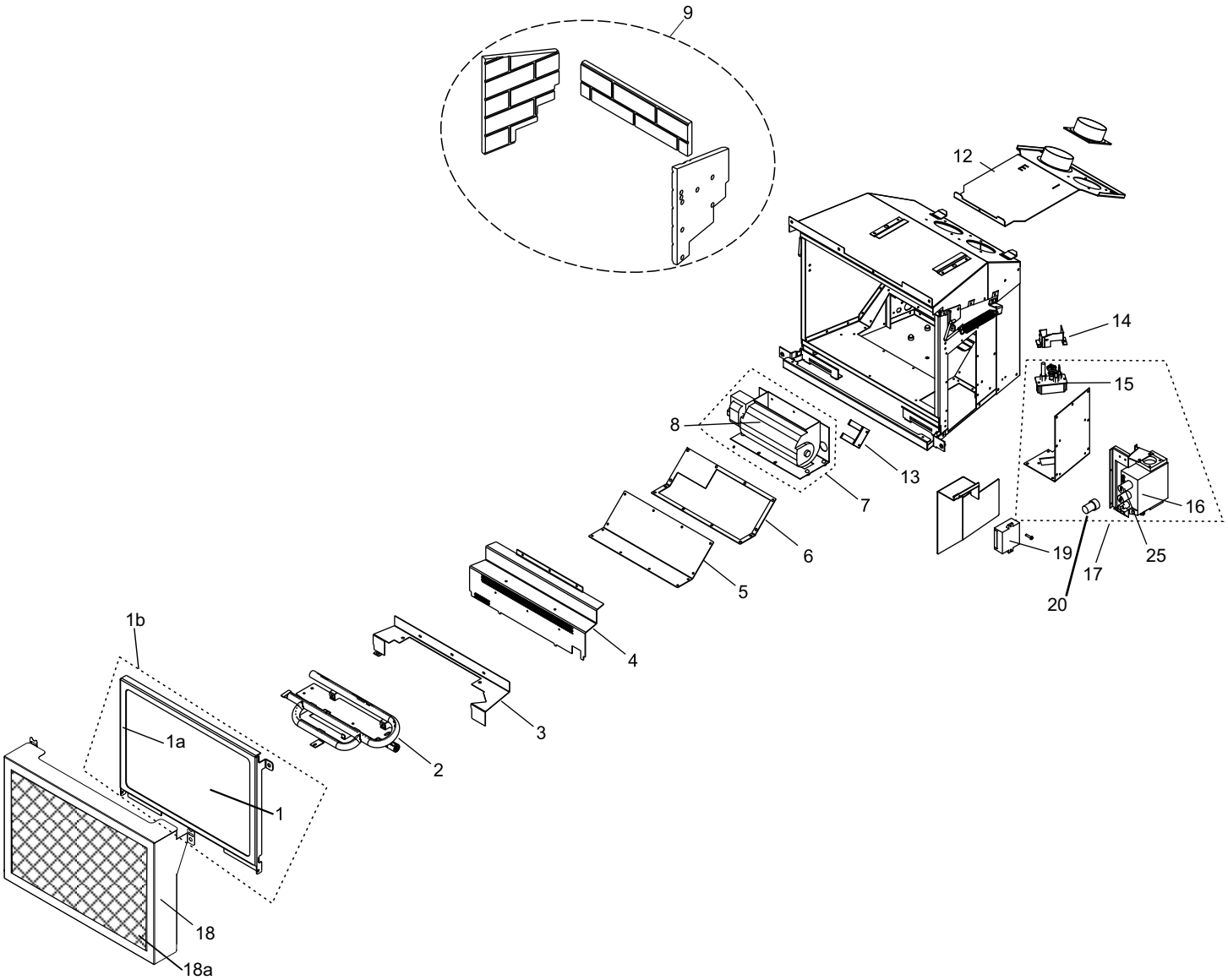
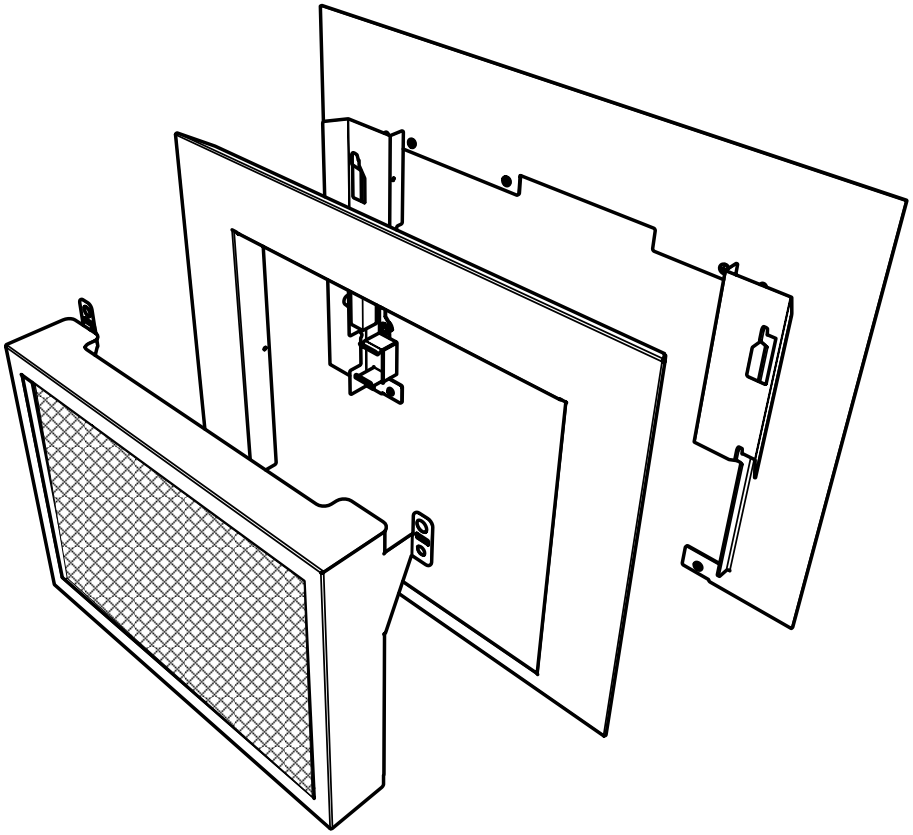
537-954 Low Profile Faceplate with Safety Screen
910-330 Fan Speed Controller
904-586 Fan Speed Controller Knob