Woodman's Parts Plus
www.woodmanspartsplus.com

Quadra-Fire Montana 42 Fireplace

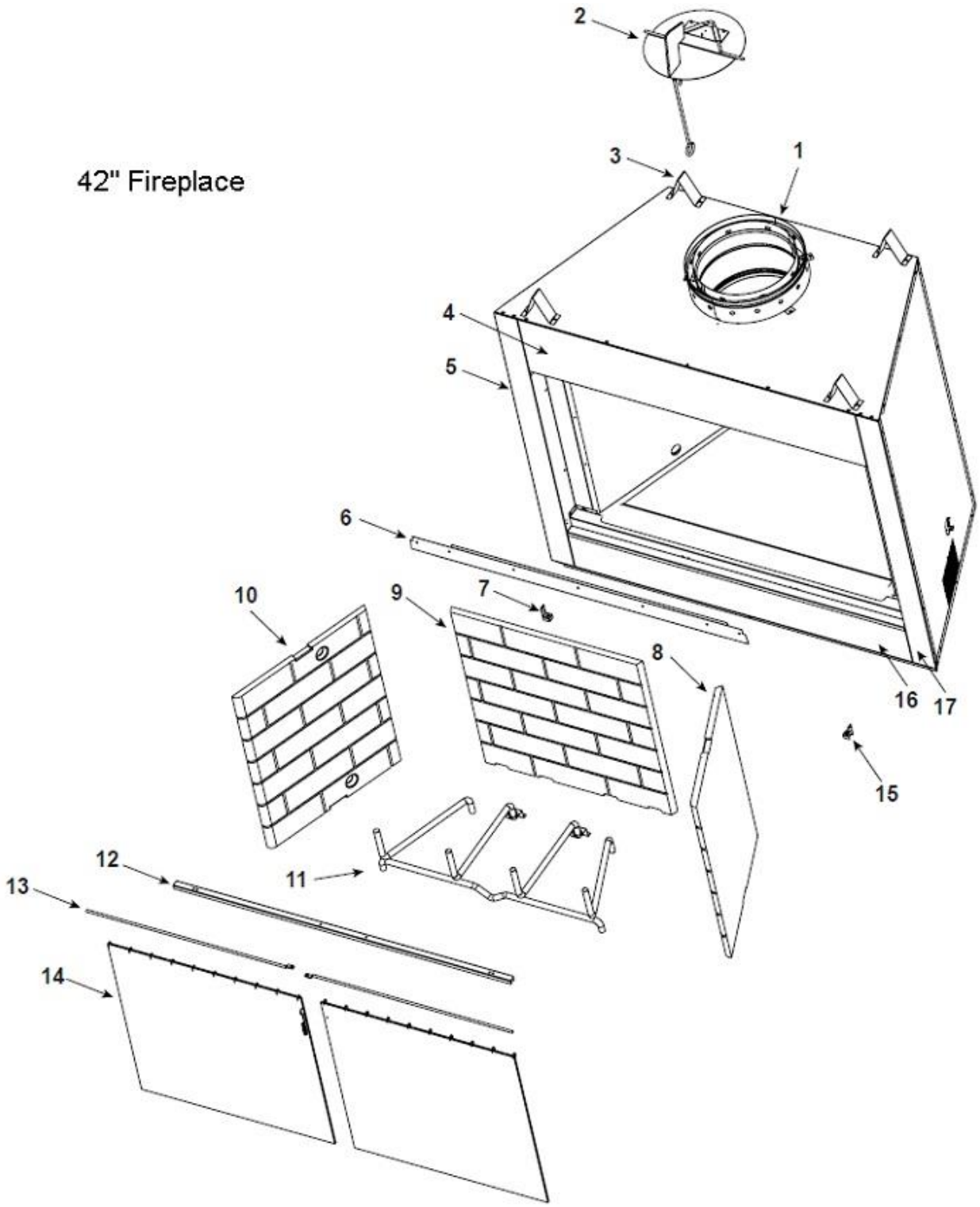

Woodman's Parts Plus
www.woodmanspartsplus.com

ITEM	DESCRIPTION	COMMENTS	HHT PART NUMBER	VCG PART NUMBER
1	Starter Collar		30399	SRV30399
2	Damper Assembly		34454	SRV34454
3	Top Stand Off	Qty 4 Req	4044-111	SRV4044-111
4	Upper Front Face		30395L	SRV30395
5	Side Column Left		30375L	SRV30375
6	Top Door Track		30400	SRV30400
7	Door Clips	Qty 2 Req	30407	SRV30407
	Tradtional Refractory			
8	**Right** Side Refractory		28393	SRV28393
9	Back Refractory		28394	SRV28394
10	**Left** Side Refractory		28393	SRV28393
	Hearth Refractory		28391	SRV28391
	Herringbone refractory available post week 3/04			
8	**Right** Side Refractory		4010-013	SRV4010-013
9	Back Refractory		4010-015	SRV4010-015
10	**Left** Side Refractory		4010-014	SRV4010-014
	Hearth Refractory		4010-020	SRV4010-020
11	Grate		GR21	SRVGR21
12	Hearth Pan	Pre AK560843	30405	
	Hearth Stone Retainer	Post AK560843	30403	SRV30403
13	Firescreen Rod	Qry 2 Req	31375	SRV31375
14	Screen Assembly	Qty 2 Req	30371	SRV30371
15	Door Pivet Clip	Qty 2 Req	31527	SRV31527
16	Bottom Front Face		30393L	SRV30393
17	Side column Right		30376L	SRV30376
	Gas Tube		30412	SRV30412
	Smoke Shield		30402	SRV30402
	Air Kit w/box		30416	SRV30416
	Outside Air Hood	Qty 2 req	33271	SRV33271