Woodman's Parts Plus
www.woodmanspartsplus.com

Quadra-Fire Montana 36 Fireplace

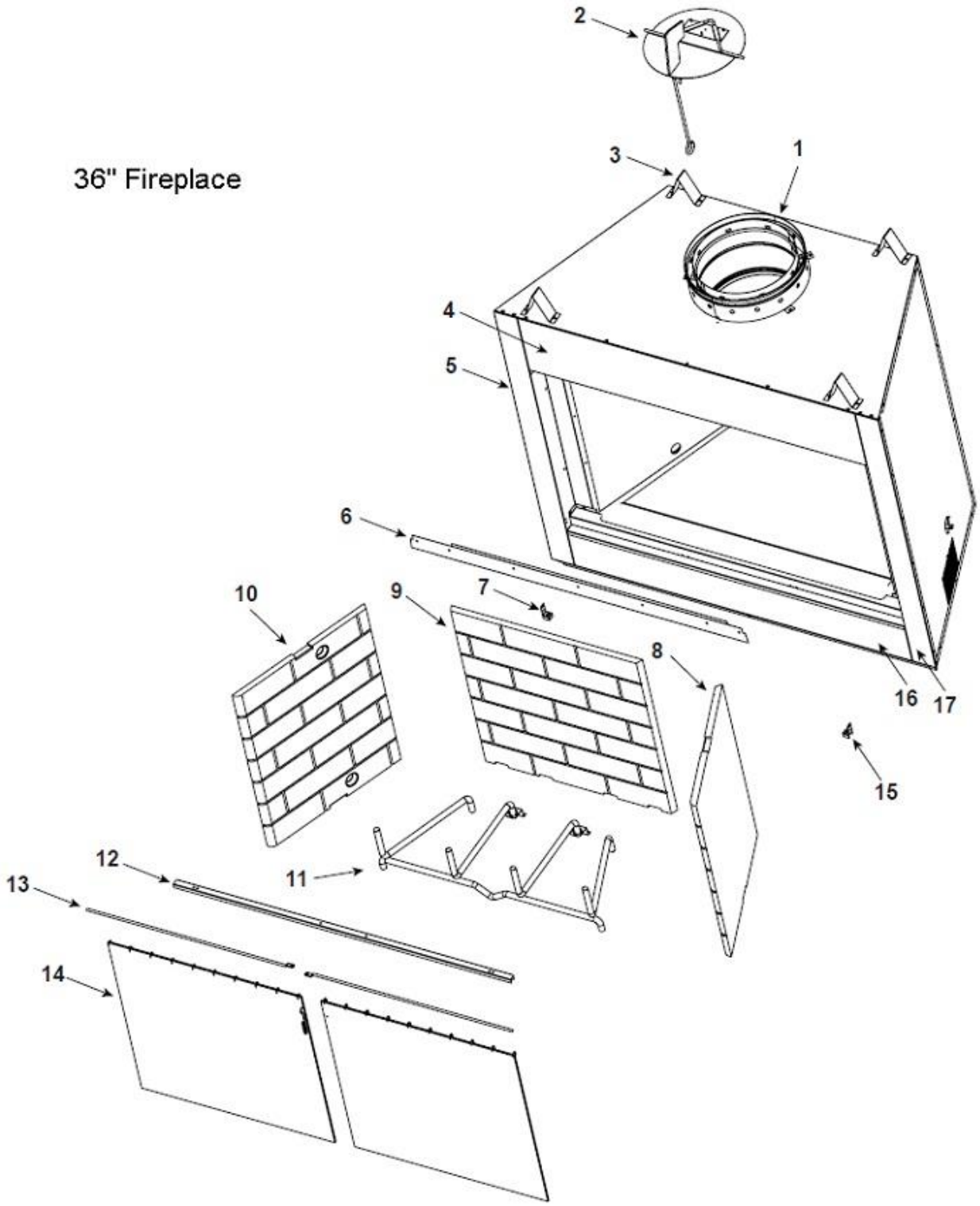

Woodman's Parts Plus
www.woodmanspartsplus.com

ITEM	DESCRIPTION	COMMENTS	HHT PART NUMBER	VCG PART NUMBER
1	Starter Collar		30399	SRV30399
2	Damper Assembly		34454	SRV34454
3	Top Stand Off	Qty 4 Req	4044-111	SRV4044-111
4	Upper Front Face		4039-114L	SRV4039-114
5	Side Column Left		30375L	SRV30375
6	Top Door Track		4039-118	SRV4039-118
7	Door Clips	Qty 2 Req	30407	SRV30407
	Traditional Refractory			
8	**Right** Side Refractory		28393	SRV28393
9	Back Refractory		29992	SRV29992
10	**Left** Side Refractory		28393	SRV28393
	Hearth Refractory		29993	SRV29993
	Herringbone Refractory available post week 3/04			
8	**Right** Side Refractory		4010-013	SRV4010-013
9	Back Refractory		4010-016	SRV4010-016
10	**Left** Side Refractory		4010-014	SRV4010-014
	Hearth Refractory		4010-019	SRV4010-019
11	Grate		GR33	SRVGR33
12	Hearth Pan	Pre AK560843	4039-102	
	Hearth Stone Retainer	Post Ak560843	4039-108	SRV4039-108
13	Firescreen Rod	Qry 2 Req	4039-120	SRV4039-120
14	Screen Assembly	Qty 2 Req	4039-119	SRV4039-119
15	Door Pivet Clip	Qty 2 Req	31527	SRV31527
16	Bottom Front Face		4039-113L	SRV4039-113
17	Side column Right		30376L	SRV30376
	Gas Tube		4039-116	SRV4039-116
	Smoke Shield		4039-106	SRV4039-106
	Air Kit w/box		30416	SRV30416
	Outside Air Hood	Qty 2 req	33271	SRV33271